META SQUARE BAR TAP Single-lever mixer - Brushed Champagne (22kt Gold)

META SQUARE

33 805 861

- 166mm projection
- pivotable spout 360°
- Optional swivel limiter available with swivel limiter set 12 820 970 90
- air-enriched flow
- max. flow 8 l/min at 3 bar flow pressure
- lead-free
- This product can help a building meet the requirements of Green Building Rating Systems, e.g. LEED®, BREEAM®, DGNB

Brushed Champagne (22kt Gold)	33 805 861-46
Chrome	33 805 861-00
Brushed Platinum	33 805 861-06
Platinum	33 805 861-08
Durabrass (23kt Gold)	33 805 861-09
Dark Chrome	33 805 861-19
Brushed Durabrass (23kt Gold)	33 805 861-28
Matte Black	33 805 861-33
Champagne (22kt Gold)	33 805 861-47
Brushed Chrome	33 805 861-93
Brushed Dark Platinum	33 805 861-99

Recommended miscellaneous

Swivel limitation set - 12 820 970 90

Recommended miscellaneous

Dispenser without rosette - Brushed Champagne (22kt Gold) 82 424 970-46

Recommended miscellaneous

Strainer waste with control handle - Brushed Champagne (22kt Gold) 10 712 970-46

We reserve the right to change designs, product range and technical specifications without prior notice.
More information can be found at: www.dornbracht.com +49 (0) 2371 8899 900 mail@dornbracht.com

META SQUARE BAR TAP Single-lever mixer - Brushed Champagne (22kt Gold)

33 805 861

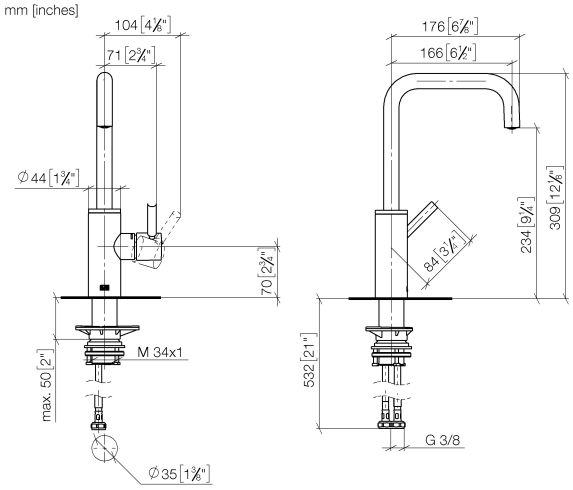

Flow rate chart

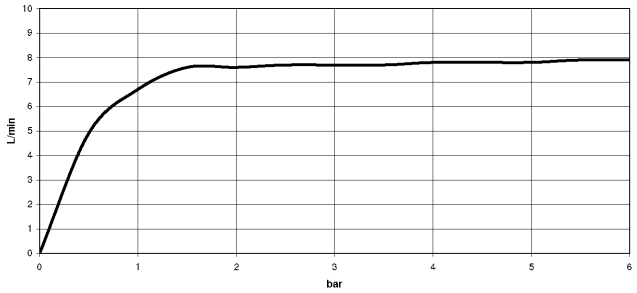

Certificates

LGA_38642. WRAS_240102021.

META SQUARE BAR TAP Single-lever mixer - Brushed Champagne (22kt Gold)

33 805 861

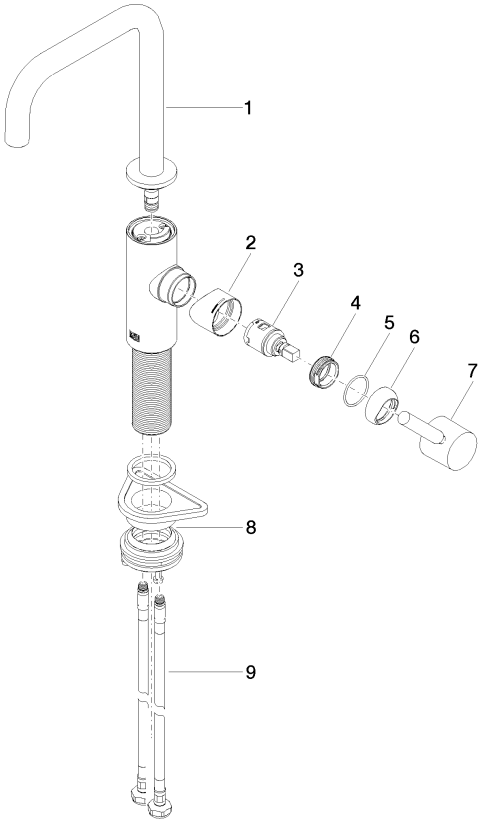

Spare parts list

No.	Item Number	Name	Quantity used	Delivery time
1	90 28 22 285 00-46	spout	1	-
	Spare part can no longer be ordered, please order the replacement item			
2	09 19 86 012-46	cover	1	60
3	90 15 05 042 00 90	cartridge	1	2
4	09 24 04 266 90	nut	1	2
5	09 14 10 091 90	seal	1	2
6	90 28 30 052 00-46	cover	1	30
7	90 20 66 003 00-46	handle	1	-
	Spare part can no longer be ordered, please order the replacement item			
8	04 23 10 044 08 90	fixing set	1	2
9	04 30 04 101 00 90	hose	2	2

We reserve the right to change designs, product range and technical specifications without prior notice.
More information can be found at: www.dornbracht.com +49 (0) 2371 8899 900 mail@dornbracht.com