Showerpipe with shower thermostat without hand shower FlowReduce - Brushed Light Gold

IMO

34 459 979

Fits: IMO, LULU, TARA, LISSÉ, VAIA, META

- shower with fixed riser projection 453mm
- overhead shower: rain flow
- rain shower Ø 220 mm
- rain shower with anti-scale system
- max. rainshower flow 7 l/min
- rotary diverter with volume control and shut-off function
- slide-on rosettes Ø 70 mm
- height of fittings up to rain shower (bottom edge) 1009mm
- height of fittings up to top edge of elbow 1150mm
- gauge 150 mm - 13 mm
- metal shower hose 1750mm with integrated anti-twist protection
- 1/2" connection
- slide bar
- Pipe diameter 23.5 mm
- quick clearing
- This product can help a building meet the requirements of Green Building Rating Systems, e.g. LEED®, BREEAM®, DGNB
- WRAS 2204013

This article does not include a hand shower!

Intrinsic protection against back flow.

Brushed Light Gold	34 459 979-27
Chrome	34 459 979-00
Brushed Platinum	34 459 979-06
Platinum	34 459 979-08
Dark Chrome	34 459 979-19
Light Gold	34 459 979-26
Brushed Durabrass (23kt Gold)	34 459 979-28
Matte Black	34 459 979-33
Brushed Bronze	34 459 979-42
Brushed Champagne (22kt Gold)	34 459 979-46
Champagne (22kt Gold)	34 459 979-47
Brushed Chrome	34 459 979-93
Brushed Dark Platinum	34 459 979-99

Required miscellaneous

Hand shower FlowReduce - Brushed Light Gold 28 018 979-27 0010

Required miscellaneous

Hand shower - Brushed Light Gold 28 016 979-27

Required miscellaneous

Hand shower - Brushed Light Gold 28 012 979-27

Required miscellaneous

Hand shower - Brushed Light Gold 28 018 979-27

Required miscellaneous

Hand shower FlowReduce - Brushed Light Gold 28 016 979-27 0010

Required miscellaneous

Hand shower FlowReduce - Brushed Light Gold 28 012 979-27 0010

Required miscellaneous

Hand shower - Brushed Light Gold 28 017 979-27

Showerpipe with shower thermostat without hand shower FlowReduce - Brushed Light Gold

IMO

34 459 979
mm [inches]
1:10

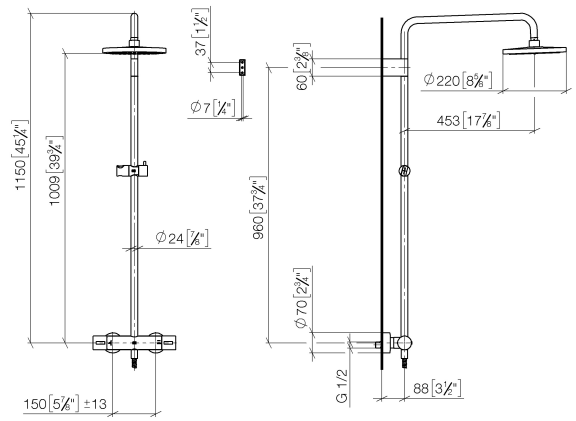

Flow rate chart

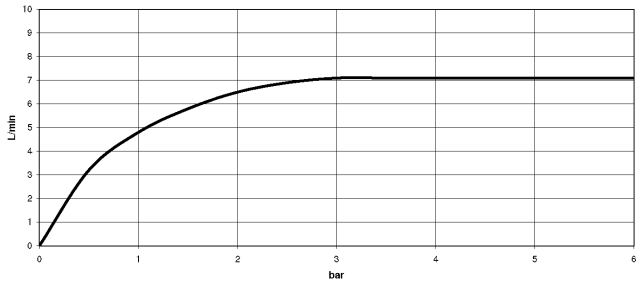

Codes & Standards

DIN 4109	ISO 3822	Scottish Water Byelaws	UK Water Supply Regulations

Ü-Zeichen

34 459 979

Certificates

WRAS_2204	LGA_38

Showerpipe with shower thermostat without hand shower FlowReduce - Brushed Light Gold

IMO

34 459 979

Product version from 4/1/2024

Parts for other finishes can be found here: Chrome

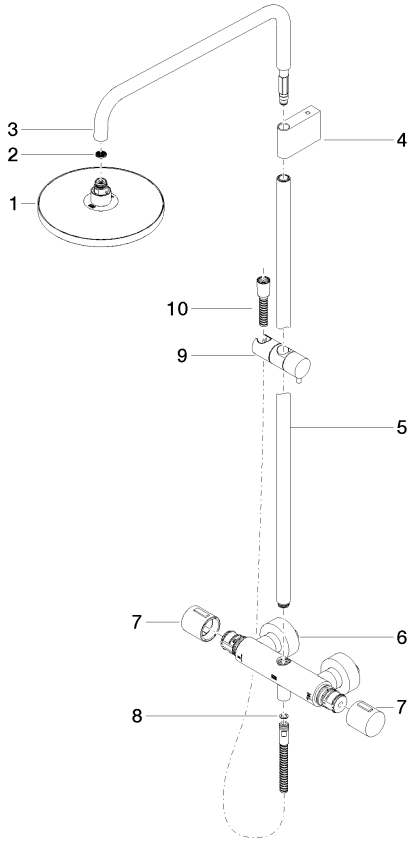

34 459 979

Spare parts list

Product version from 4/1/2024

No.	Item Number	Name	Quantity used	Delivery time
	90 12 05 092 20-27	shower	11	30