LISSÉ Three-hole single-lever bath mixer for bath rim or tile edge installation - Brushed Dark Platinum

LISSÉ

27 412 845 Product version from 4/1/2024

- spout: circular, air-enriched flow
- max. flow 16.9 l/min at 3 bar flow pressure
- Hand shower: COMPACT RAIN, max. flow rate 6.8 l/min (at 3 bar)
- complete hand shower set with anti-scale system
- 200mm projection
- automatic bath/shower diverter
- height of mixer 141 mm
- height up to aerator 88 mm
- hole diameter spout 32 mm
- hole diameter single-lever mixer 35 mm
- hole diameter for complete hand shower set 32 mm
- rosette for complete hand shower set Ø 50mm
- metal shower hose 1750mm with integrated anti-twist protection

Intrinsic protection against back flow.

Brushed Dark Platinum	27 412 845-99
Chrome	27 412 845-00
Brushed Platinum	27 412 845-06
Dark Chrome	27 412 845-19
Brushed Light Gold	27 412 845-27
Matte Black	27 412 845-33
Brushed Chrome	27 412 845-93

Recommended miscellaneous

Perfecto installation kit - 12 614 970 90

Recommended miscellaneous

Decorative caps for Perfecto - Brushed Dark Platinum 12 801 970-99

●1 pair

LISSÉ Three-hole single-lever bath mixer for bath rim or tile edge installation - Brushed Dark Platinum

27 412 845 Product version from 4/1/2024

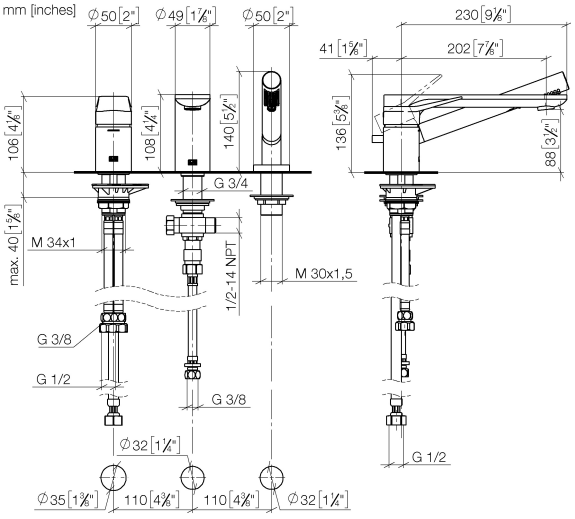

Flow rate chart

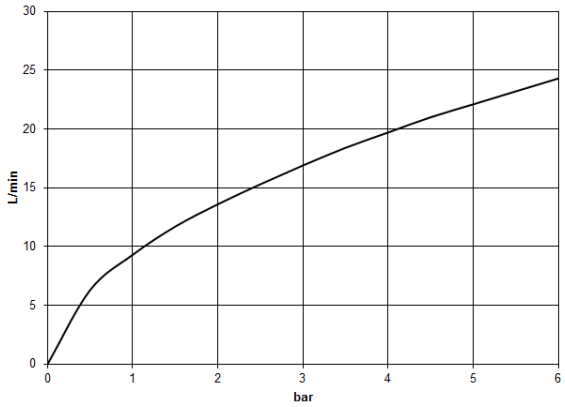

Codes & Standards

ASME A112.18.1	cUPC	EN 1717

Certificates and sustainability

Belgaqua_24-008-2 IAPMO_4976 (

LISSÉ Three-hole single-lever bath mixer for bath rim or tile edge installation - Brushed Dark Platinum

27 412 845 Product version from 4/1/2024

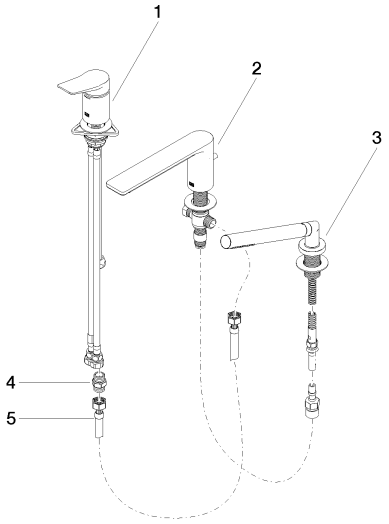

Spare parts list

No.	Item Number	Name	Quantity used	Delivery time
3	27 702 979-99	Hand shower set for bath rim or tile edge installation - Brushed Dark Platinum	1.00	20
5	12 502 970 90	High pressure hose 1/2" x 1/2" x 400 mm -	1.00	2
1	29 300 845-99	connection	1.00	-
	Spare part can no longer be ordered, please order the replacement item			
2	13 512 845-99	spout	1.00	-
	Spare part can no longer be ordered, please order the replacement item			
4	90 24 03 168 00 90	nipple	1.00	2