Hand shower set with individual rosettes FlowReduce - Brushed Durabrass (23kt Gold)

SERIES SPECIFIC

27 808 980 Product version from 4/1/2024

- COMPACT RAIN, max. flow rate 6.8 l/min (at 3 bar)
- with anti-scale system
- 3/8" shower outlet
- rosette for wall elbow 60 x 60mm
- rosette for shower holder 60 x 60mm
- metal shower hose 1250mm with integrated anti-twist protection
- 1/2" wall elbow
- This product can help a building meet the requirements of Green Building Rating Systems, e.g. LEED®, BREEAM®, DGNB

Intrinsic protection against back flow.

Brushed Durabrass (23kt Gold)	27 808 980-28 0010
Chrome	27 808 980-00
Chrome	27 808 980-00 0010
Brushed Platinum	27 808 980-06
Brushed Platinum	27 808 980-06 0010
Platinum	27 808 980-08
Platinum	27 808 980-08 0010
Dark Chrome	27 808 980-19
Dark Chrome	27 808 980-19 0010
Brushed Light Gold	27 808 980-27
Brushed Light Gold	27 808 980-27 0010
Brushed Durabrass (23kt Gold)	27 808 980-28
Matte Black	27 808 980-33
Matte Black	27 808 980-33 0010
Brushed Champagne (22kt Gold)	27 808 980-46 0010
Champagne (22kt Gold)	27 808 980-47 0010
Brushed Chrome	27 808 980-93
Brushed Chrome	27 808 980-93 0010
Brushed Dark Platinum	27 808 980-99
Brushed Dark Platinum	27 808 980-99 0010

Recommended miscellaneous

Concealed wall elbow - 35 085 970 90
●max. recess depth 163 mm
●min. recess depth 90 mm

Hand shower set with individual rosettes FlowReduce - Brushed Durabrass (23kt Gold)

SERIES SPECIFIC

27 808 980 Product version from 4/1/2024

mm [inches]

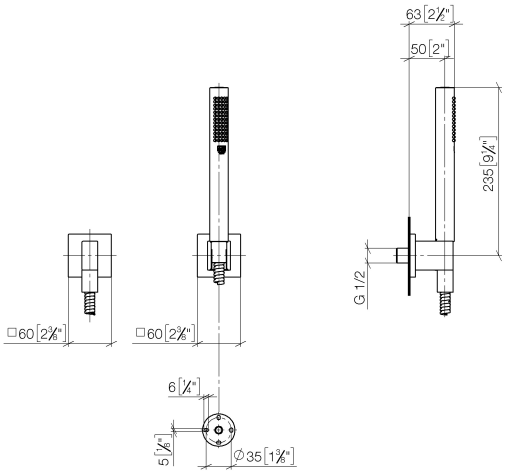

Codes & Standards

DIN 4109	ISO 3822	Ü-Zeichen

Certificates and sustainability

LGA_29

Hand shower set with individual rosettes FlowReduce - Brushed Durabrass (23kt Gold)

SERIES SPECIFIC

27 808 980 Product version from 4/1/2024

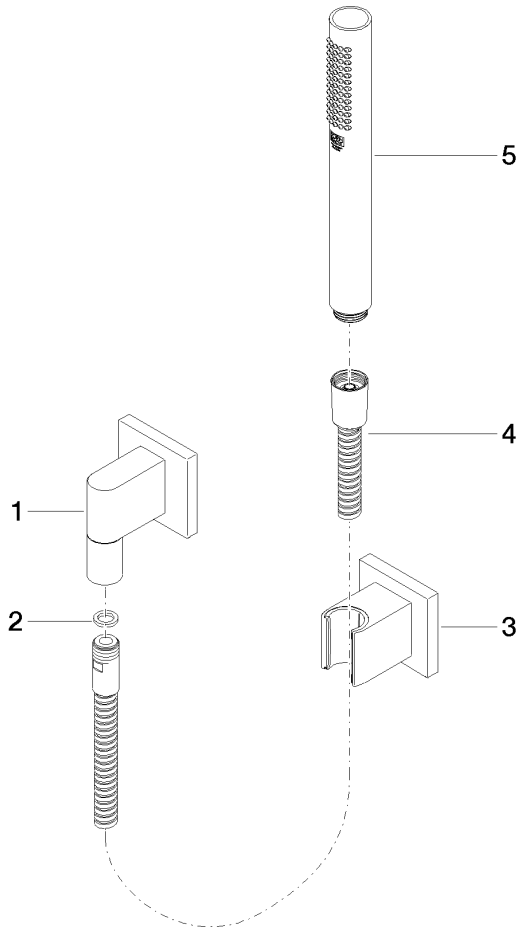

Spare parts list

No.	Item Number	Name	Quantity used	Delivery time
3	28 050 980-28	Wall bracket - Brushed Durabrass (23kt Gold)	1.00	20
4	90 30 02 072 00-28	Metal shower hose 1/2" x 3/8" x 1250 mm - Brushed Durabrass (23kt Gold)	1.00	20
1	28 450 980-28	Wall elbow - Brushed Durabrass (23kt Gold)	1.00	20
2	90 14 20 026 00 90	seal	1.00	2
5	90 12 11 140 41-28	shower	1.00	20

We reserve the right to change designs, product range and technical specifications without prior notice.
More information can be found at: www.dornbracht.com +49 (0) 2371 8899 900 mail@dornbracht.com