IMO Single-lever basin mixer with pop-up waste - Chrome

33 500 671

- 125mm projection
- fixed spout
- rectangular, air-enriched flow
- height of mixer 170 mm
- height up to aerator 71 mm
- hole diameter 35 mm
- 2x screw-in M 10 x 1 pressure hose, leak-tested
- max. flow 4.6 l/min
- lead-free
- This product can help a building meet the requirements of Green Building Rating Systems, e.g. LEED®, BREEAM®, DGNB

Only suitable for basins with an overflow.

Chrome	33 500 671-00
Brushed Platinum	33 500 671-06
Dark Chrome	33 500 671-19
Brushed Light Gold	33 500 671-27
Matte Black	33 500 671-33
Brushed Chrome	33 500 671-93
Brushed Dark Platinum	33 500 671-99

IMO Single-lever basin mixer with pop-up waste - Chrome

33 500 671

mm [inches]

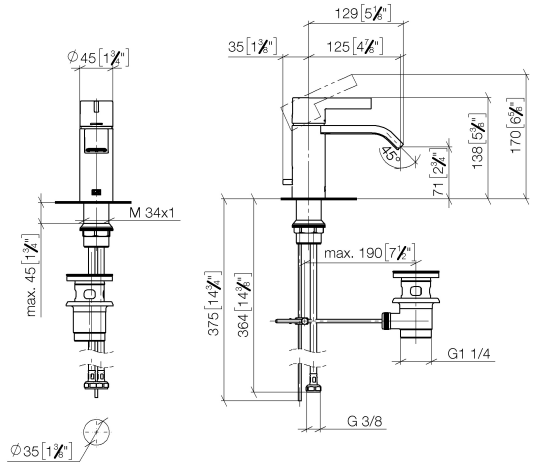

Flow rate chart

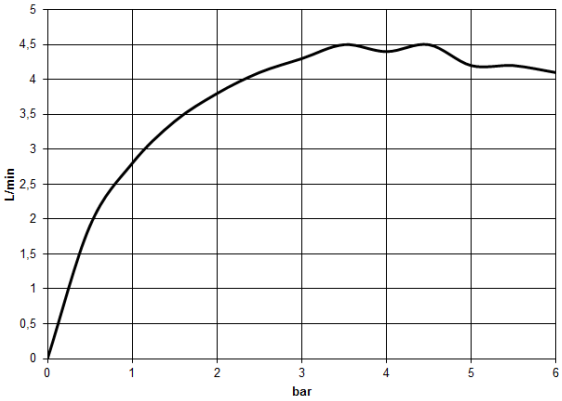

33 500 671

Spare parts list