# MADISON Bath shower set for bath rim or tile edge installation - Brushed Platinum

MADISON

27 502 360 Product version from 7/1/2022

- 225mm projection
- Hand shower: COMPACT RAIN, max. flow rate 6.8 l/min (at 3 bar)
- spout: circular, air-enriched flow
- complete hand shower set with anti-scale system
- automatic bath/shower diverter
- height of mixer 185 mm
- height up to aerator 140 mm
- hole diameter valve 32 mm
- hole diameter spout 32 mm
- hole diameter for complete hand shower set 32 mm
- rosette for complete hand shower set Ø 55mm
- rosette for deck valve Ø 55mm
- metal shower hose 1750mm with integrated anti-twist protection
- max. spout flow rate 23 l/min

Intrinsic protection against back flow.

| | |
|---|---|
| Brushed Platinum | 27 502 360-06 0050 |
| Chrome | 27 502 360-00 0050 |
| Platinum | 27 502 360-08 0050 |
| Durabrass (23kt Gold) | 27 502 360-09 0050 |
| Brushed Durabrass (23kt Gold) | 27 502 360-28 0050 |
| Brushed Dark Brass | 27 502 360-39 0050 |
| Brushed Dark Platinum | 27 502 360-99 0050 |

## Recommended miscellaneous

**Perfecto installation kit -** 12 614 970 90

## Recommended miscellaneous



**Decorative caps for Perfecto - Brushed Platinum** 12 801 970-06

●1 pair

# MADISON Bath shower set for bath rim or tile edge installation - Brushed Platinum



27 502 360 Product version from 7/1/2022

mm [inches]

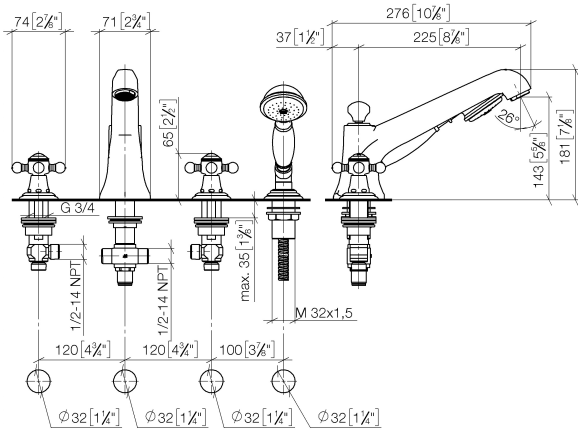

# MADISON Bath shower set for bath rim or tile edge installation - Brushed Platinum

27 502 360 Product version from 7/1/2022

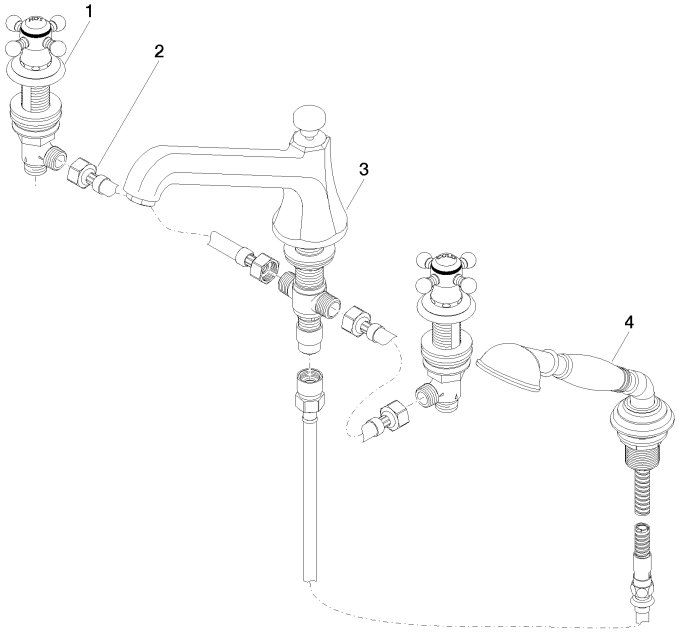


## Spare parts list

| No. | Item Number | Name | Quantity used | Delivery time |
|---|---|---|---|---|
| 4 | 27 703 360-06 0050 | MADISON Hand shower set for bath rim or tile edge installation - Brushed Platinum | 1.00 | - |
| | Spare part can no longer be ordered, please order the replacement item | | | |
| 1 | 20 000 360-06 | MADISON Deck valve clockwise closing cold or hot - Brushed Platinum | 1.00 | - |
| | Spare part can no longer be ordered, please order the replacement item | | | |
| 3 | 13 502 380-06 | spout | 1.00 | 60 |
| 2 | 12 502 970 90 | High pressure hose 1/2" x 1/2" x 400 mm - | 1.00 | 2 |

We reserve the right to change designs, product range and technical specifications without prior notice.
More information can be found at: www.dornbracht.com +49 (0) 2371 8899 900 mail@dornbracht.com