EDITION PRO Wall bracket - Chrome

28 050 626

- rosette Ø 55 mm

Chrome	28 050 626-00
Matte Black	28 050 626-33
Brushed Chrome	28 050 626-93

EDITION PRO Wall bracket - Chrome

28 050 626

mm [inches]

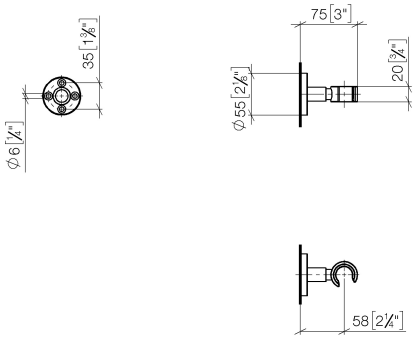

EDITION PRO Wall bracket - Chrome

28 050 626

Parts for other
finishes can be found
here: Matte Black

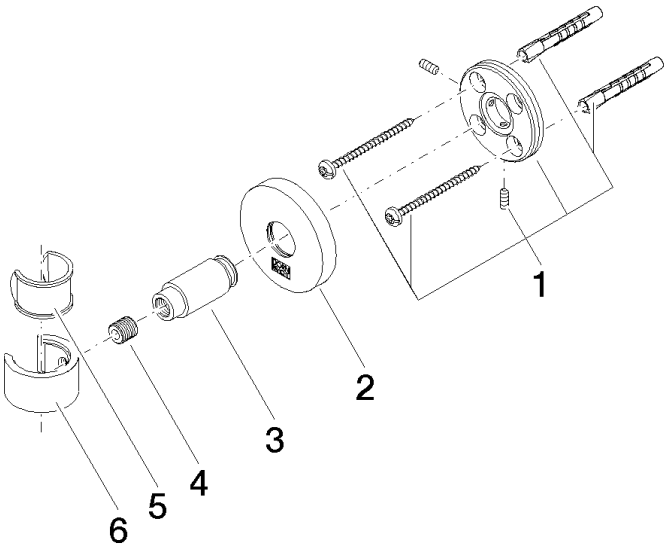

EDITION PRO Wall bracket - Chrome

28 050 626

Spare parts list

No.	Item Number	Name	Quantity used	Delivery time
	05 17 62 500 00 90	fixing set	6	2