SYNC Profi single-lever mixer - Brushed Champagne (22kt Gold)

SYNC

33 865 895 Product version from 2/4/2019

- 200mm projection
- Flexible silicone hose with large operating range of up to 350 mm
- pivotable spout 360°
- Optional swivel limiter available with swivel limiter set 12 821 970 90
- This product can help a building meet the requirements of Green Building Rating Systems, e.g. LEED®, BREEAM®, DGNB
- air-enriched flow and spray flow
- height of mixer 451 mm
- height up to aerator 119 mm
- hole diameter 35 mm
- sprayface with anti-scaling system
- max. flow 9.5 l/min at 3 bar flow pressure
- lead-free

Intrinsic protection against back flow.

Brushed Champagne (22kt Gold)	33 865 895-46
Chrome	33 865 895-00
Brushed Platinum	33 865 895-06
Platinum	33 865 895-08
Durabrass (23kt Gold)	33 865 895-09
Dark Chrome	33 865 895-19
Brushed Durabrass (23kt Gold)	33 865 895-28
Matte Black	33 865 895-33
Brushed Bronze	33 865 895-42
Champagne (22kt Gold)	33 865 895-47
Brushed Chrome	33 865 895-93
Brushed Dark Platinum	33 865 895-99

Recommended miscellaneous

Swivel limitation set - 12 821 970 90

Recommended miscellaneous

Dispenser without rosette - Brushed Champagne (22kt Gold) 82 424 970-46

Recommended miscellaneous

Strainer waste with control handle - Brushed Champagne (22kt Gold) 10 712 970-46

SYNC Profi single-lever mixer - Brushed Champagne (22kt Gold)

33 865 895 Product version from 2/4/2019

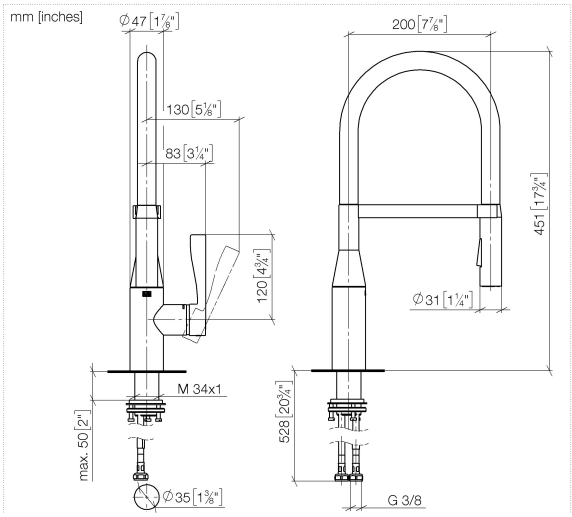

Flow rate chart

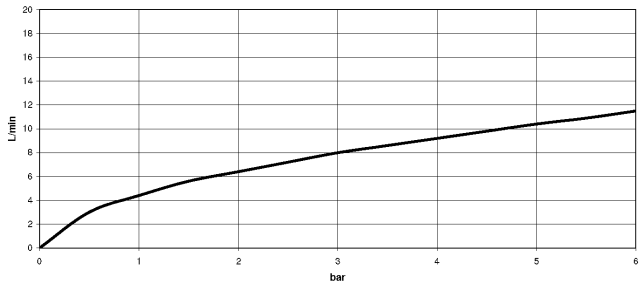

Codes & Standards

DIN 4109	ISO 3822	Ü-Zeichen

Certificates and sustainability

LGA_29

SYNC Profi single-lever mixer - Brushed Champagne (22kt Gold)

33 865 895 Product version from 2/4/2019

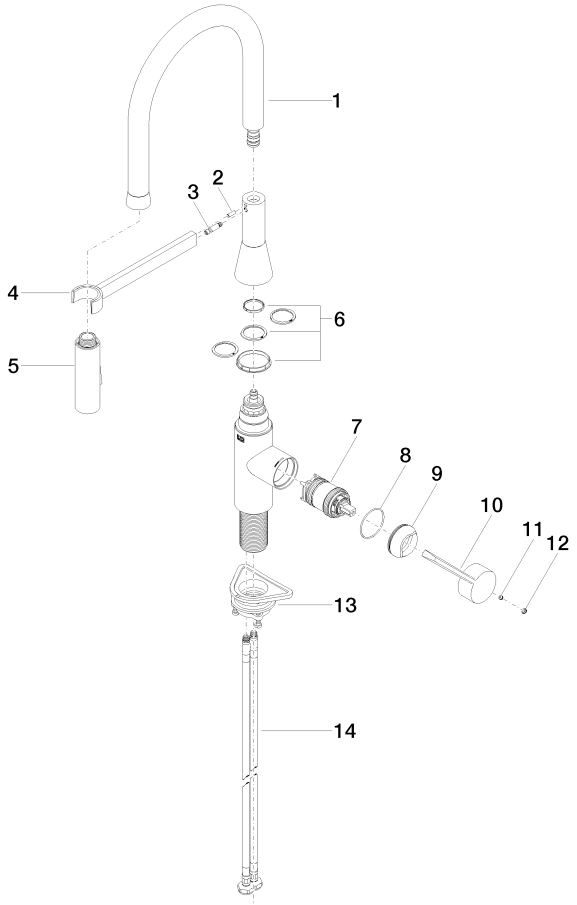

Spare parts list

No.	Item Number	Name	Quantity used	Delivery time
12	90 31 20 087 00-46	plug	1.00	30
3	09 31 11 209 90	pin	1.00	2
8	09 14 10 190 90	seal	1.00	2
14	04 30 04 101 00 90	hose	2.00	2
1	90 30 02 100 00-46	hose	1.00	30
10	09 20 89 020-46	handle	1.00	30
5	04 12 11 150 00 90	shower	1.00	2
4	90 17 20 045 00-46	holder	1.00	30
9	09 28 30 030-46	cover	1.00	60
2	09 31 11 040 90	pin	1.00	2
13	04 30 11 040 00 90	fixing set	1.00	2
11	90 31 11 063 00 90	pin	1.00	2
7	90 15 05 064 05 90	cartridge	1.00	2
6	12 821 970 90	Swivel limitation set -	1.00	2

We reserve the right to change designs, product range and technical specifications without prior notice.
More information can be found at: www.dornbracht.com +49 (0) 2371 8899 900 mail@dornbracht.com