Rain shower for recessed ceiling installation with light 300 x 240 mm - Brushed Light Gold

IMO

28 044 980

Fits: IMO, LULU, MEM, CL.1, CYO

- rain shower 300 x 240mm
- PURE RAIN, max. flow rate 6.8 l/min (at 3 bar)
- PURIFY RAIN, max. flow rate 6.8 l/min (at 3 bar)
- min. recess depth 137 mm
- with anti-scale system
- Output 12V DC SELV / Class II
- ZigBee Light Link RGBW controller
- Provided by customer: Zigbee gateway
- Not suitable for use in a steam room.

Three-way diverter trim is sold separately

includes light bulbs with a Class G energy efficiency

Three-way diverter trim is sold separately

includes light bulbs with a Class G energy efficiency

Brushed Light Gold	28 044 980-27 0050
Chrome	28 044 980-00 0050
Brushed Platinum	28 044 980-06 0050
Platinum	28 044 980-08 0050
Dark Chrome	28 044 980-19 0050
Brushed Light Gold	28 044 980-27
Brushed Durabrass (23kt Gold)	28 044 980-28 0050
Matte Black	28 044 980-33 0050
Brushed Champagne (22kt Gold)	28 044 980-46 0050
Champagne (22kt Gold)	28 044 980-47 0050
Brushed Chrome	28 044 980-93 0050
Brushed Dark Platinum	28 044 980-99 0050

Required miscellaneous

Concealed ceiling installation box for recessed ceiling installation with light - 35 044 970 90

- concealed rough parts
- flush-mounted installation box 360x 300 mm RAL 9003 signal white
- recess depth 137mm
- Supply pipe 7 m
- Input 100-240V AC 50-60Hz
- Output 12V DC SELV / Class II
- ZigBee Light Link RGBW controller
- Provided by customer: Zigbee gateway

Rain shower for recessed ceiling installation with light 300 x 240 mm - Brushed Light Gold

IMO

28 044 980

mm [inches]

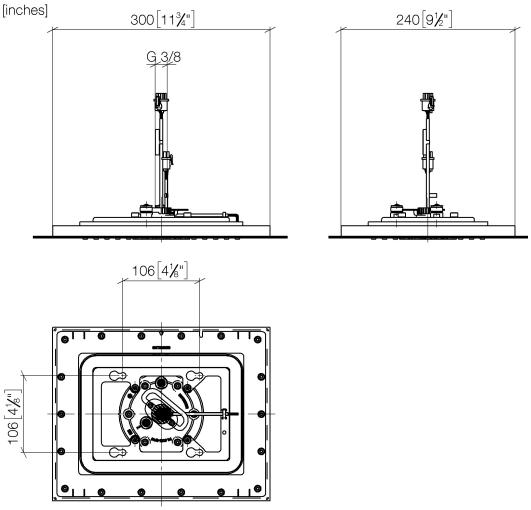

Flow rate chart

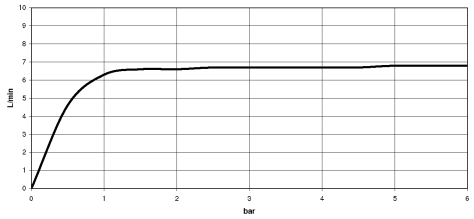

28 044 980

Product version from 7/1/2022

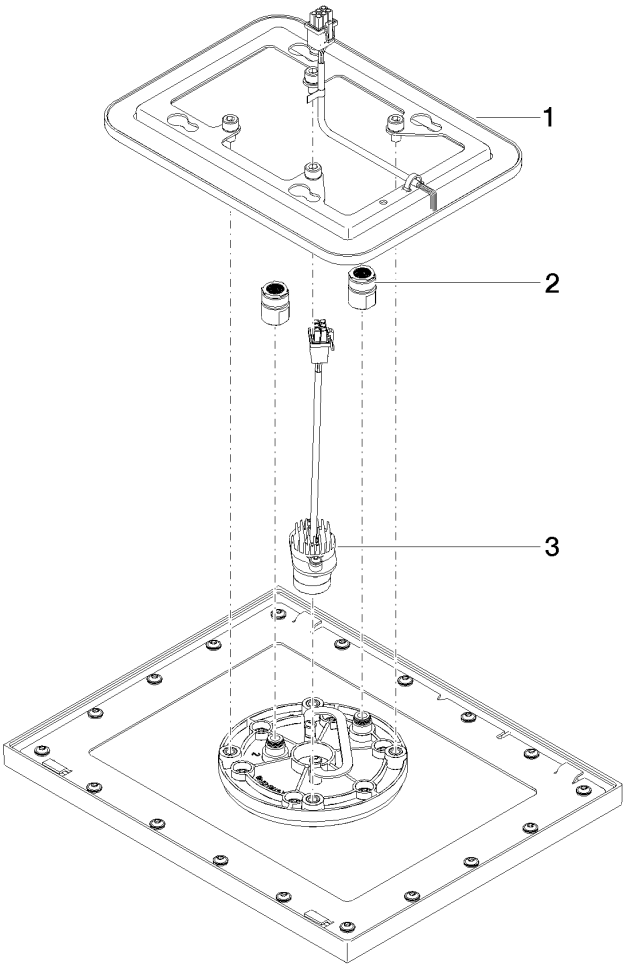

28 044 980

Spare parts list

Product version from 7/1/2022

No.	Item Number	Name	Quantity used	Delivery time
	90 10 01 224 00 90	electronic accessories	4	2