TARA BAR TAP Single-lever mixer - Brushed Bronze

33 805 888 Product version from 1/1/2025

- 166mm projection
- pivotable spout 360°
- laminar flow
- height of mixer 302 mm
- height up to laminar flow regulator 185 mm
- hole diameter 35 mm
- max. flow 8.3 l/min at 3 bar flow pressure
- lead-free
- This product can help a building meet the requirements of Green Building Rating Systems, e.g. LEED®, BREEAM®, DGNB
- WRAS

Brushed Bronze	33 805 888-42
Chrome	33 805 888-00
Brushed Platinum	33 805 888-06
Platinum	33 805 888-08
Durabrass (23kt Gold)	33 805 888-09
Dark Chrome	33 805 888-19
Brushed Durabrass (23kt Gold)	33 805 888-28
Matte Black	33 805 888-33
Brushed Champagne (22kt Gold)	33 805 888-46
Champagne (22kt Gold)	33 805 888-47
Brushed Chrome	33 805 888-93
Brushed Dark Platinum	33 805 888-99

Recommended miscellaneous

Strainer waste with control handle - Brushed Bronze 10 710 970-42

TARA BAR TAP Single-lever mixer - Brushed Bronze

33 805 888 Product version from 1/1/2025

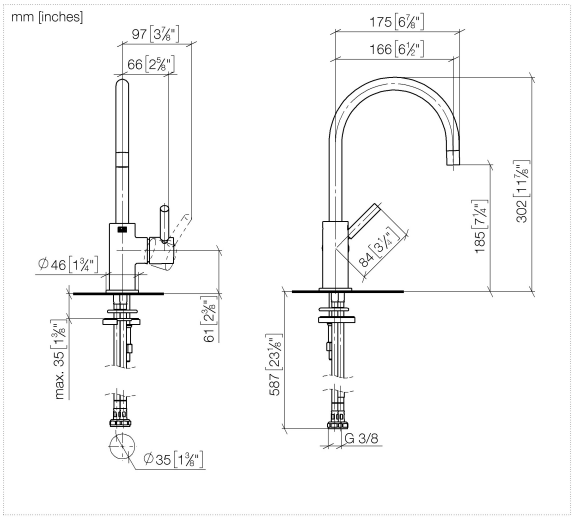

Flow rate chart

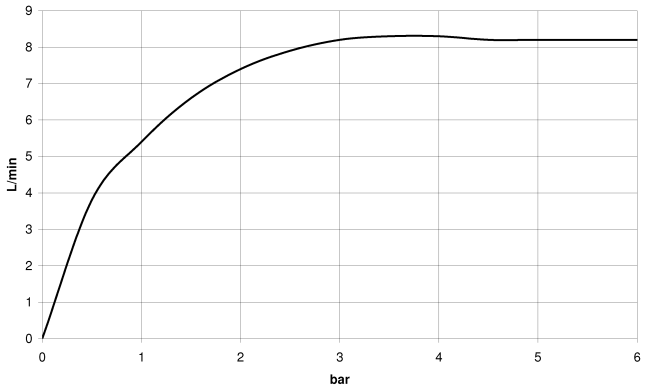

Codes & Standards

DIN 4109	ISO 3822	Scottish Water Byelaws	UK Water Supply Regulations

Ü-Zeichen

TARA BAR TAP Single-lever mixer - Brushed Bronze

33 805 888 Product version from 1/1/2025

Certificates

LGA_38	WRAS_240102

TARA BAR TAP Single-lever mixer - Brushed Bronze

33 805 888 Product version from 1/1/2025

Parts for other finishes can be found here: Chrome

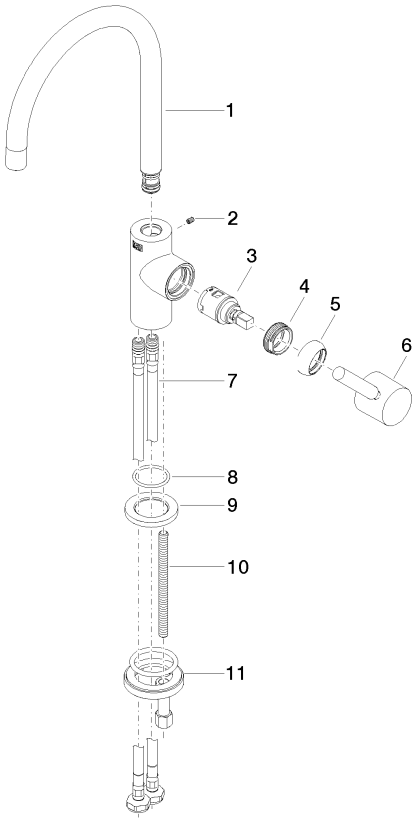

Spare parts list

No.	Item Number	Name	Quantity used	Delivery time
1	90 28 22 393 00-42	spout	1	30
2	09 31 11 008 90	pin	1	2
3	90 15 05 042 00 90	cartridge	1	2
4	09 24 04 266 90	nut	1	2
5	09 28 30 021-42	cover	1	60
6	90 20 66 003 00-42	handle	1	30
7	04 30 04 105 00 90	hose	2	2
8	09 14 10 118 90	seal	1	2
9	09 27 85 001-42	rosette	1	60
10	09 31 11 012 90	pin	1	2
11	04 30 11 038 64 90	fixing set	1	2

We reserve the right to change designs, product range and technical specifications without prior notice.
More information can be found at: www.dornbracht.com +49 (0) 2371 8899 900 mail@dornbracht.com