TARA ULTRA Single-lever mixer Pull-down with spray function - Champagne (22kt Gold)

33 870 875 Product version from 2/26/2015 to 10/30/2024

- 240mm projection
- pivotable spout 360°
- Optional swivel limiter available with swivel limiter set 12 823 970 90
- laminar and spray flow
- height of mixer 500 mm
- height up to laminar flow regulator 240 mm
- hole diameter 35 mm
- 1800 mm metal shower hose
- sprayface with anti-scaling system
- max. flow 10.4 l/min at 3 bar flow pressure
- lead-free
- Flow modes can be changed while the water is running
- This product can help a building meet the requirements of Green Building Rating Systems, e.g. LEED®, BREEAM®, DGNB

Intrinsic protection against back flow.

Champagne (22kt Gold)	33 870 875-47
Chrome	33 870 875-00
Brushed Platinum	33 870 875-06
Platinum	33 870 875-08
Durabrass (23kt Gold)	33 870 875-09
Dark Chrome	33 870 875-19
Brushed Durabrass (23kt Gold)	33 870 875-28
Matte Black	33 870 875-33
Brushed Bronze	33 870 875-42
Brushed Champagne (22kt Gold)	33 870 875-46
Brushed Chrome	33 870 875-93
Brushed Dark Platinum	33 870 875-99

Recommended miscellaneous

Swivel limitation set - 12 823 970 90

Recommended miscellaneous

Strainer waste with control handle - Champagne (22kt Gold) 10 712 970-47

Recommended miscellaneous

Dispenser without rosette - Champagne (22kt Gold) 82 424 970-47

We reserve the right to change designs, product range and technical specifications without prior notice.
More information can be found at: www.dornbracht.com +49 (0) 2371 8899 900 mail@dornbracht.com

TARA ULTRA Single-lever mixer Pull-down with spray function - Champagne (22kt Gold)

33 870 875 Product version from 2/26/2015 to 10/30/2024

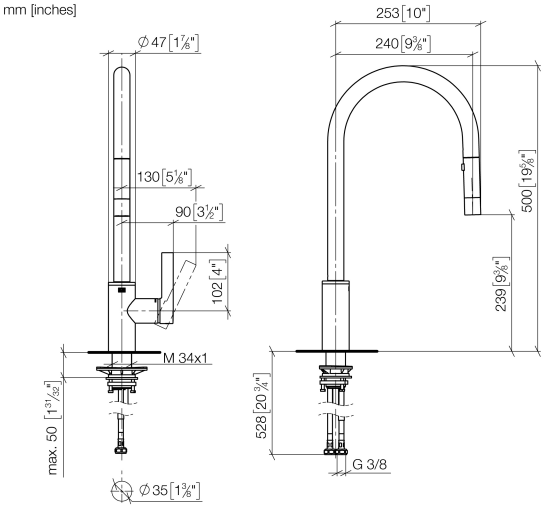

Flow rate chart

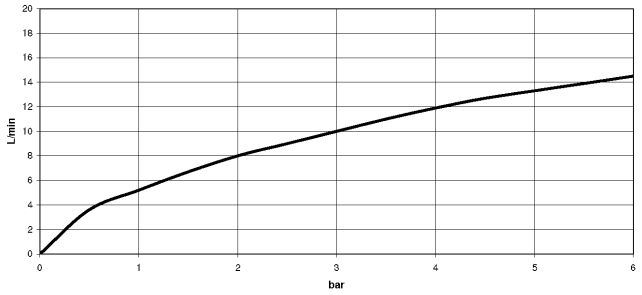

Codes & Standards

DIN 4109	Executive Order no. 1007	ISO 3822	Ü-Zeichen

TARA ULTRA Single-lever mixer Pull-down with spray function - Champagne (22kt Gold)

33 870 875 Product version from 2/26/2015 to 10/30/2024

Certificates and sustainability

LGA_28	GDV_0400

TARA ULTRA Single-lever mixer Pull-down with spray function - Champagne (22kt Gold)

33 870 875 Product version from 2/26/2015 to 10/30/2024

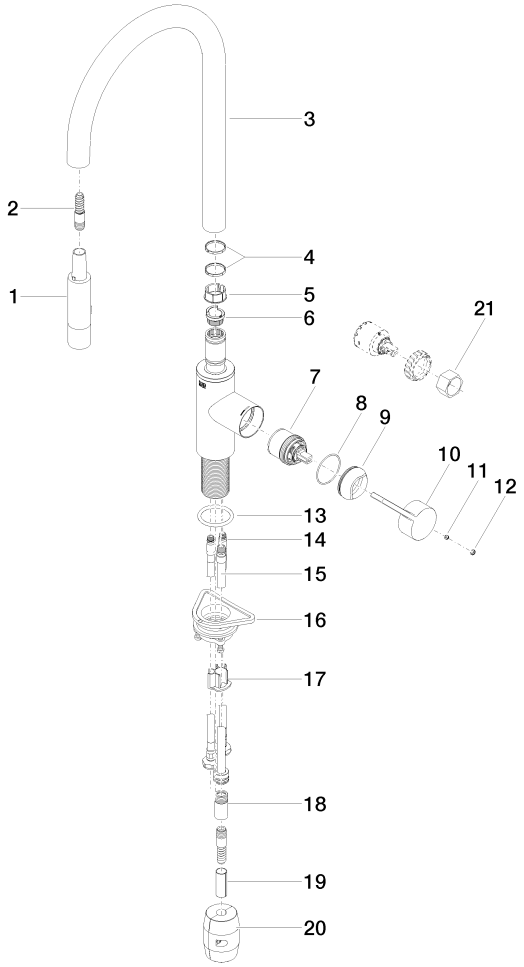

Spare parts list

No.	Item Number	Name	Quantity used	Delivery time
18	90 24 03 253 00 90	adaptor	1.00	2
12	90 31 20 087 00-47	plug	1.00	30
3	90 28 22 304 00-47	spout	1.00	30
2	04 30 02 120 00-85	hose	1.00	10
5	09 18 40 186 90	sleeve	1.00	2
19	09 30 03 038 90	hose	1.00	2
16	04 30 11 040 00 90	fixing set	1.00	2
17	09 20 93 056 90	insert	1.00	2
14	04 30 04 101 00 90	hose	2.00	2
13	09 14 10 036 90	seal	1.00	2
8	09 14 10 190 90	seal	1.00	2
6	09 30 11 203 90	ring	1.00	2
20	04 21 50 010 00 90	accessories	1.00	2
15	04 28 20 067 00 90	pipe	1.00	2
9	09 28 30 030-47	cover	1.00	60
4	09 28 10 160 90	ring	2.00	2
10	09 20 87 020-47	handle	1.00	30
11	90 31 11 063 00 90	pin	1.00	2
21	90 30 09 031 00 90	key	1.00	2
1	90 12 11 148 00-47	shower	1.00	60
7	90 15 05 064 05 90	cartridge	1.00	2

We reserve the right to change designs, product range and technical specifications without prior notice.
More information can be found at: www.dornbracht.com +49 (0) 2371 8899 900 mail@dornbracht.com