# TARA Bath mixer for wall mounting with hand shower set - Brushed Dark Platinum



25 133 892 Product version up to 5/27/2021

- spout: circular, air-enriched flow
- max. flow 22 l/min at 3 bar flow pressure
- Hand shower: COMPACT RAIN, max. flow rate 6.8 l/min (at 3 bar)
- complete hand shower set with anti-scale system
- 240mm projection
- rotary diverter for bath/shower
- slide-on rosettes Ø 65 mm
- rosette for shower holder Ø 50mm
- 1/2" connection
- gauge 150 mm - 15 mm
- metal shower hose 1250mm with integrated anti-twist protection
- WRAS

Intrinsic protection against back flow.

Stand pipes combination possible on request (special production).

| | |
|---|---|
| Brushed Dark Platinum | 25 133 892-99 |
| Chrome | 25 133 892-00 |
| Brushed Platinum | 25 133 892-06 |
| Platinum | 25 133 892-08 |
| Dark Chrome | 25 133 892-19 |
| Brushed Durabrass (23kt Gold) | 25 133 892-28 |
| Matte Black | 25 133 892-33 |
| Brushed Dark Brass | 25 133 892-39 |
| Brushed Champagne (22kt Gold) | 25 133 892-46 |
| Champagne (22kt Gold) | 25 133 892-47 |
| Brushed Chrome | 25 133 892-93 |

# TARA Bath mixer for wall mounting with hand shower set - Brushed Dark Platinum



25 133 892 Product version up to 5/27/2021

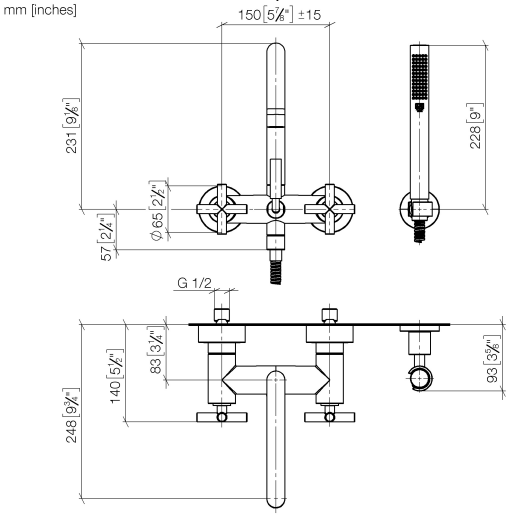


## Flow rate chart

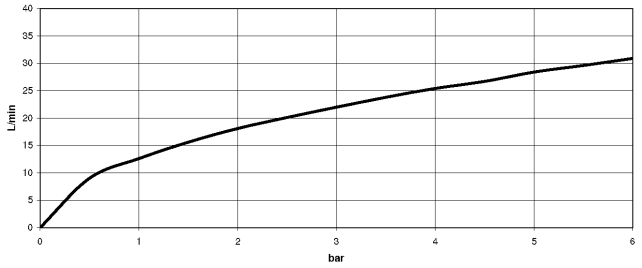


## Codes & Standards

| | | | |
|---|---|---|---|
| DIN 4109 | EN 1717 | ISO 3822 | Scottish Water Byelaws |
| UK Water Supply Regulations | Ü-Zeichen | | |

25 133 892 Product version up to 5/27/2021

## Certificates and sustainability

| | | |
|---|---|---|
| WRAS_2210 | LGA_18 | Belgaqua_21-026-2 |

# TARA Bath mixer for wall mounting with hand shower set - Brushed Dark Platinum



25 133 892 Product version up to 5/27/2021

Parts for other finishes can be found here: Chrome

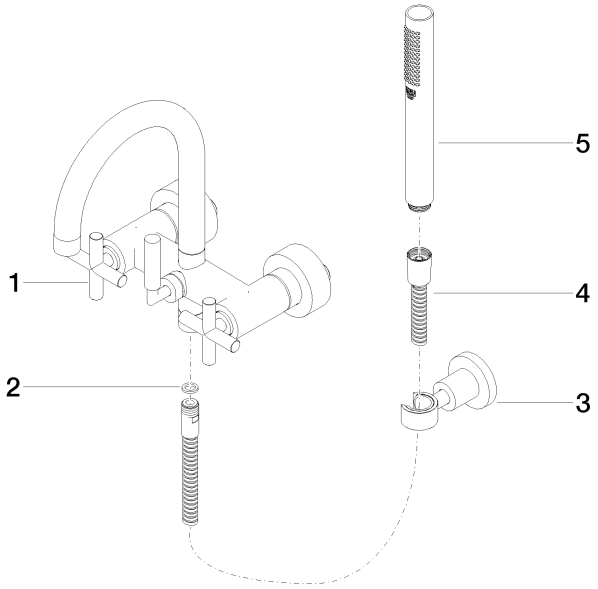


## Spare parts list

| No. | Item Number | Name | Quantity used | Delivery time |
|---|---|---|---|---|
| 3 | 28 050 892-99 | TARA Wall bracket - Brushed Dark Platinum | 1.00 | 20 |
| 4 | 90 30 02 072 00-99 | Metal shower hose 1/2" x 3/8" x 1250 mm - Brushed Dark Platinum | 1.00 | 20 |
| 1 | 25 100 892-99 | TARA Bath mixer for wall mounting - Brushed Dark Platinum | 1.00 | - |
| | Spare part can no longer be ordered, please order the replacement item | | | |
| 2 | 90 14 20 026 00 90 | seal | 1.00 | 2 |
| 5 | 90 12 11 140 41-99 | shower | 1.00 | 20 |

We reserve the right to change designs, product range and technical specifications without prior notice.
More information can be found at: www.dornbracht.com +49 (0) 2371 8899 900 mail@dornbracht.com