TARA Single-hole basin mixer with pop-up waste - Chrome

22 512 892 Product version from 6/30/2009 to 5/27/2021

- 135mm projection
- pivotable spout 360°
- circular, air-enriched flow
- height of mixer 275 mm
- height up to aerator 168 mm
- hole diameter 35 mm
- rosette Ø 59 mm
- 2x screw-in M 10 x 1 pressure hose, leak-tested
- max. flow 7 l/min
- lead-free
- This product can help a building meet the requirements of Green Building Rating Systems, e.g. LEED®, BREEAM®, DGNB
- WRAS

Only suitable for basins with an overflow.

Chrome	22 512 892-00
Brushed Platinum	22 512 892-06
Platinum	22 512 892-08
Dark Chrome	22 512 892-19
Brushed Durabrass (23kt Gold)	22 512 892-28
Matte Black	22 512 892-33
Brushed Bronze	22 512 892-42
Brushed Champagne (22kt Gold)	22 512 892-46
Champagne (22kt Gold)	22 512 892-47
Brushed Chrome	22 512 892-93
Brushed Dark Platinum	22 512 892-99

We reserve the right to change designs, product range and technical specifications without prior notice.
More information can be found at: www.dornbracht.com +49 (0) 2371 8899 900 mail@dornbracht.com

TARA Single-hole basin mixer with pop-up waste - Chrome

22 512 892 Product version from 6/30/2009 to 5/27/2021

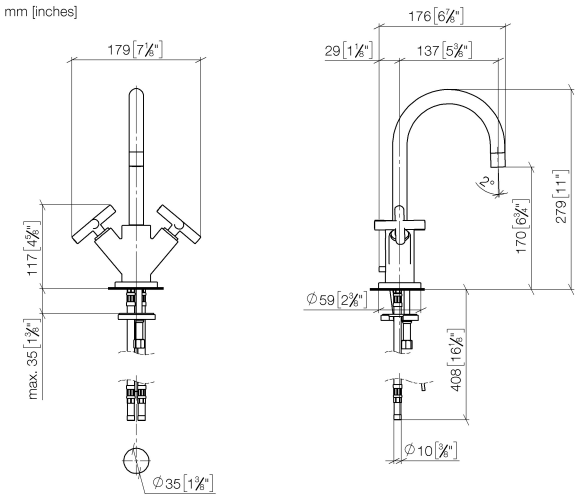

Flow rate chart

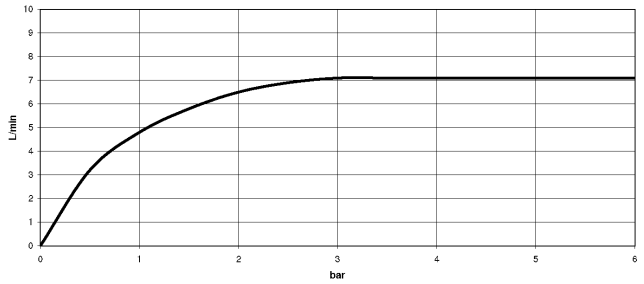

Codes & Standards

DIN 4109	EN 200	Executive Order no. 1007	ISO 3822
Scottish Water Byelaws	UK Water Supply Regulations	Ü-Zeichen	VA-Zeichen

22 512 892 Product version from 6/30/2009 to 5/27/2021

Certificates and sustainability

ETA_18	LGA_18	GDV_0400	WRAS_240702

TARA Single-hole basin mixer with pop-up waste - Chrome
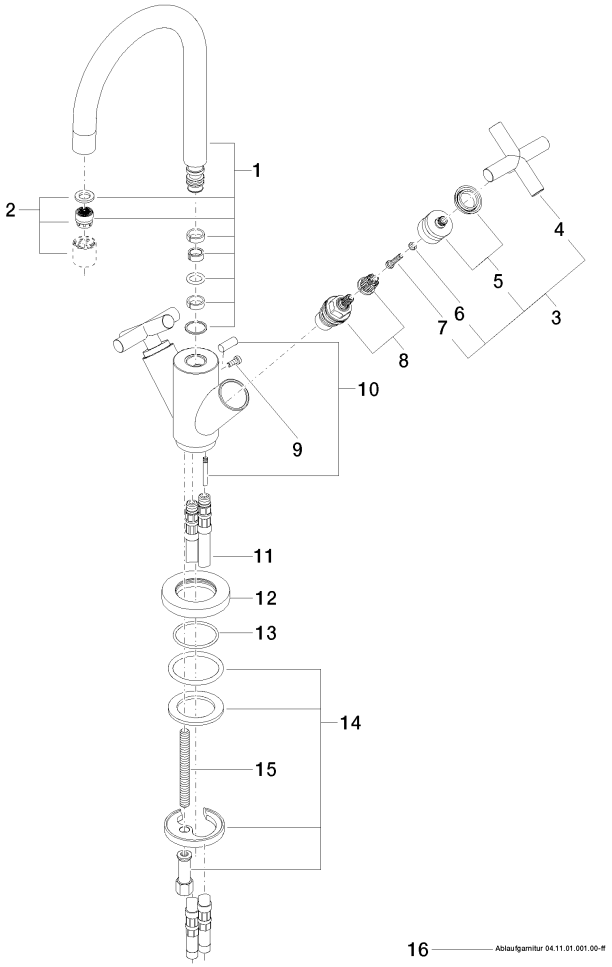
22 512 892 Product version from 6/30/2009 to 5/27/2021