TARA Three-hole basin mixer with pop-up waste - Champagne (22kt Gold)

TARA

20 713 882

- 165mm projection
- pivotable spout 360°
- circular, air-enriched flow
- height of mixer 285 mm
- height up to aerator 163 mm
- hole diameter valve 32 mm
- hole diameter spout 35 mm
- rosette Ø 55 mm
- 2x screw-in M 10 x 1 pressure hose, leak-tested
- max. flow 7 l/min
- lead-free
- WRAS 1703013
- This product can help a building meet the requirements of Green Building Rating Systems, e.g. LEED®, BREEAM®, DGNB

Only suitable for basins with an overflow.

Champagne (22kt Gold)	20 713 882-47
Chrome	20 713 882-00
Brushed Platinum	20 713 882-06
Platinum	20 713 882-08
Dark Chrome	20 713 882-19
Brushed Durabrass (23kt Gold)	20 713 882-28
Matte Black	20 713 882-33
Brushed Champagne (22kt Gold)	20 713 882-46
Brushed Chrome	20 713 882-93
Brushed Dark Platinum	20 713 882-99

Recommended miscellaneous

High pressure hoses - 12 506 970 90
●2x 3/8" x 1/2" x 500mm high pressure hose

TARA Three-hole basin mixer with pop-up waste - Champagne (22kt Gold)

20 713 882

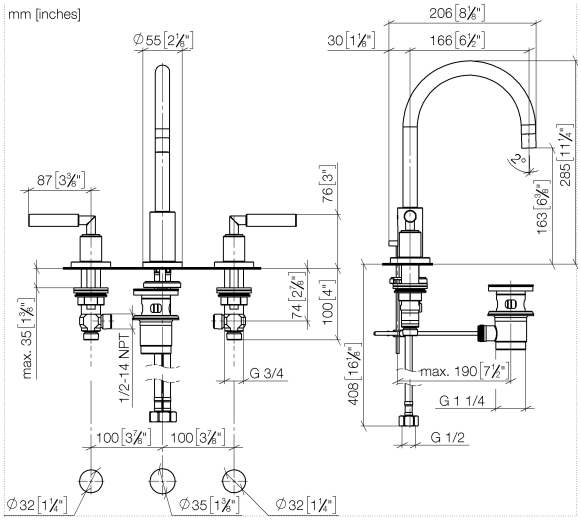

Flow rate chart

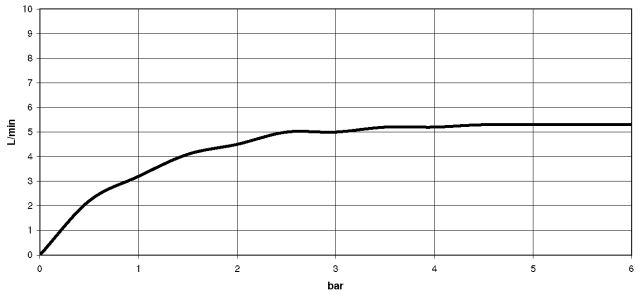

Certificates

WRAS_2212026. GDV_0400289.

TARA Three-hole basin mixer with pop-up waste - Champagne (22kt Gold)

20 713 882

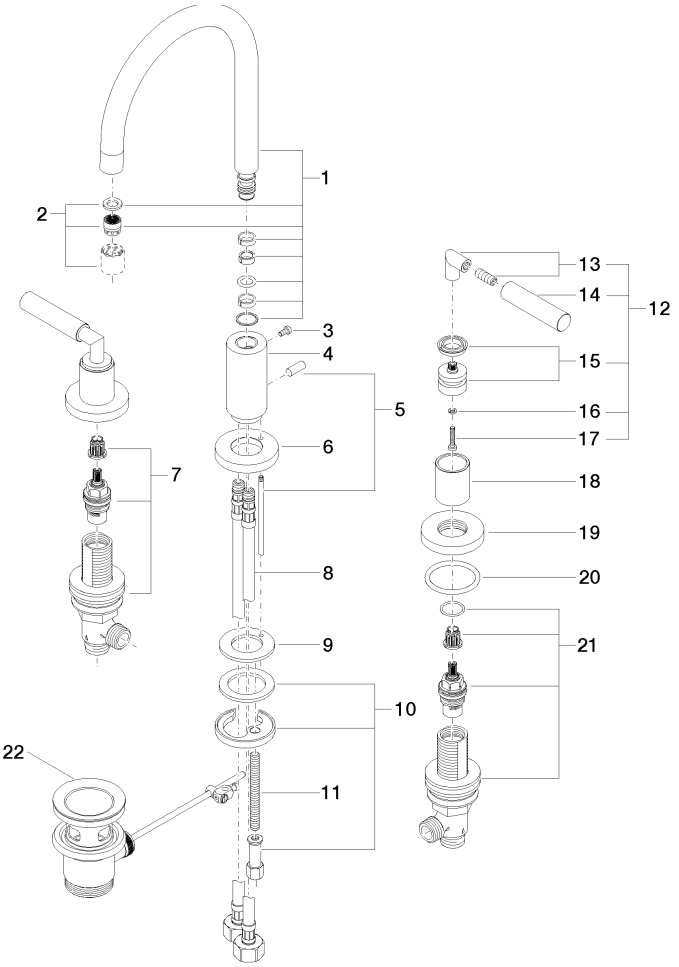

TARA Three-hole basin mixer with pop-up waste - Champagne (22kt Gold)

20 713 882

Spare parts list

No.	Item Number	Name	Quantity used	Delivery time
1	90 28 22 213 01-47	spout	1	30
2	90 23 01 028 03-47	aerator	1	30
3	09 30 30 057 90	screw	1	2
4	09 11 10 087 10-47	connection	1	30
5	04 20 89 030 80-47	pull-rod	1	30
6	09 28 10 133-47	ring	1	30
7	90 17 11 040 51 90	side panel	1	2
8	04 30 04 019 00 90	hose	2	2
9	09 14 05 047 90	seal	1	2
10	04 30 11 038 00 90	fixing set	1	2
11	09 31 11 011 90	pin	1	2
12	04 20 88 052 00-47	handle	2	30
13	04 18 20 022 00-47	angle	2	60
14	09 20 88 052-47	handle	2	30
15	90 12 12 007 00-47	base	2	30
16	90 30 11 029 00 90	disc	2	2
17	90 30 30 075 00 90	screw	2	2
18	09 21 02 140-47	sleeve	2	60
19	09 27 89 105-47	rosette	2	60
20	90 14 10 043 00 90	seal	2	2
21	90 17 11 040 50 90	side panel	1	2
22	90 11 01 001 00-47	pop-up waste	1	30

We reserve the right to change designs, product range and technical specifications without prior notice.
More information can be found at: www.dornbracht.com +49 (0) 2371 8899 900 mail@dornbracht.com