xGRID Installation track 555 mm -

SERIES-VARIOUS

12 360 970 90

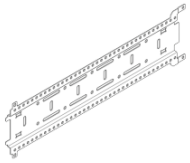

- width 555mm
- height 135 mm
- depth 12 mm
- retaining screws and plugs

More about the xGRID installation track can be found in the Shower Book brochure

xGRID Installation track 555 mm -

SERIES-VARIOUS

12 360 970 90

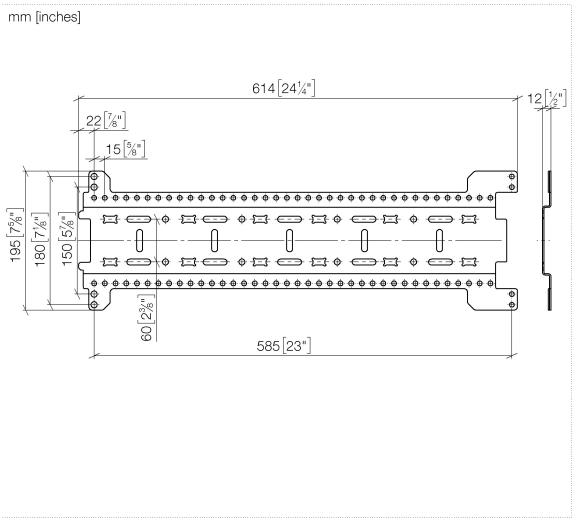

xGRID Installation track 555 mm -

SERIES-VARIOUS

12 360 970 90

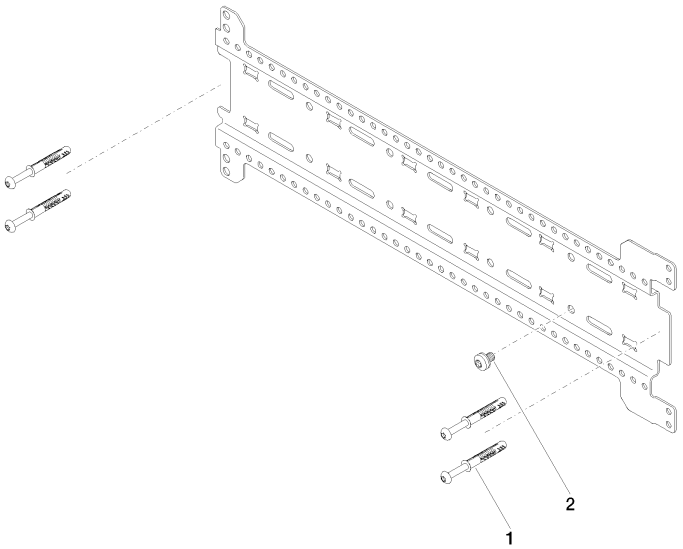

Spare parts list

No.	Item Number	Name	Quantity used	Delivery time
1	04 30 31 054 00 90	fixing set	2.00	2
2	90 30 30 212 00 90	fixing set	1.00	2

We reserve the right to change designs, product range and technical specifications without prior notice.
More information can be found at: www.dornbracht.com +49 (0) 2371 8899 900 mail@dornbracht.com