CYO Single-lever basin mixer without pop-up waste - Brushed Dark Platinum

33 521 811

- 143mm projection
- fixed spout
- rectangular, air-enriched flow
- height of mixer 180 mm
- height up to aerator 128 mm
- hole diameter 35 mm
- 2x screw-in M 8 x 1 pressure hose, leak-tested
- max. flow 4.5 l/min
- lead-free
- This product can help a building meet the requirements of Green Building Rating Systems, e.g. LEED®, BREEAM®, DGNB
- WRAS

Must not be combined with continuous-flow heaters heaters.

Distance from centre of tap hole to wall min. 55 mm or to front edge of basin min. 40 mm.

Brushed Dark Platinum	33 521 811-99
Chrome	33 521 811-00
Brushed Platinum	33 521 811-06
Dark Chrome	33 521 811-19
Brushed Durabrass (23kt Gold)	33 521 811-28

CYO Single-lever basin mixer without pop-up waste - Brushed Dark Platinum

33 521 811

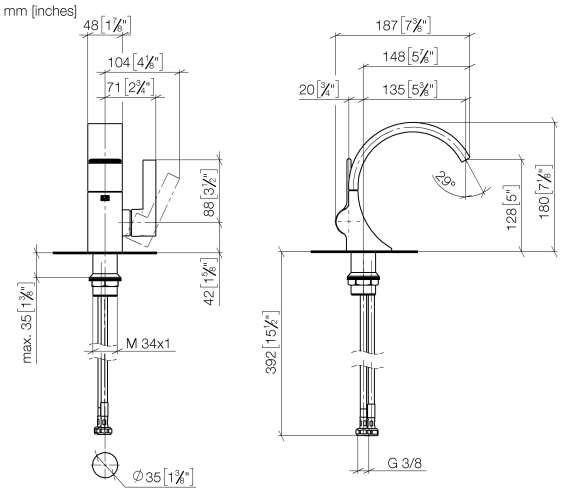

Flow rate chart

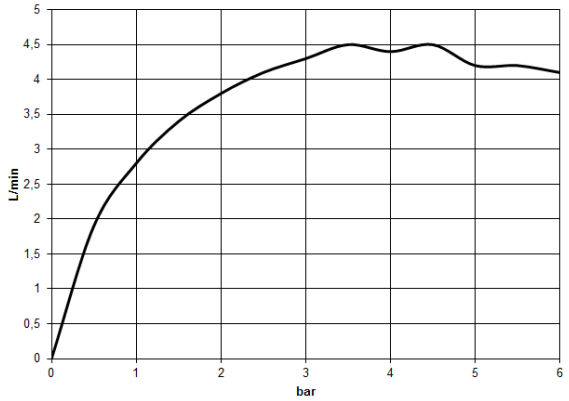

Codes & Standards

DIN 4109	Executive Order no. 1007	ISO 3822	Scottish Water Byelaws
UK Water Supply Regulations	Ü-Zeichen		

CYO Single-lever basin mixer without pop-up waste - Brushed Dark Platinum

33 521 811

Certificates

GDV_0400	LGA_38	WRAS_2111

CYO Single-lever basin mixer without pop-up waste - Brushed Dark Platinum

33 521 811

Parts for other
finishes can be found
here: Chrome

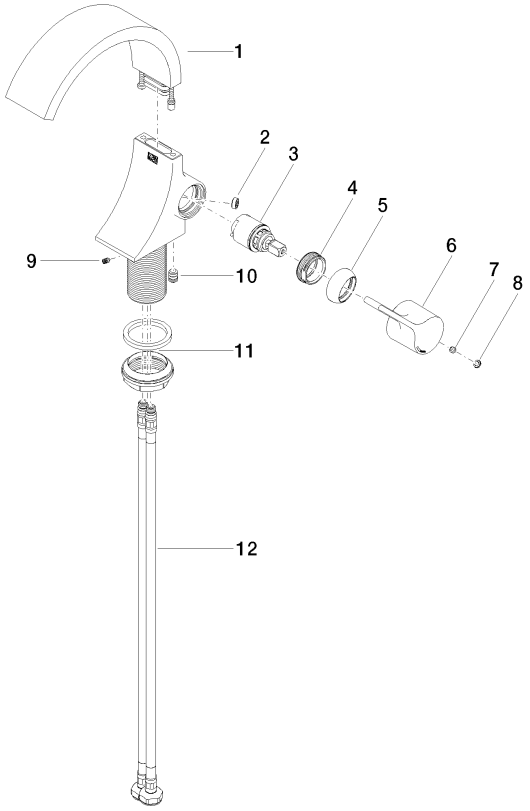

Spare parts list

No.	Item Number	Name	Quantity used	Delivery time
1	90 11 70 012 01-99	spout	1	20
2	09 23 01 172 90	flow reducer	1	2
3	90 15 05 044 00 90	cartridge	1	2
4	09 24 04 266 90	nut	1	2
5	09 28 30 021-99	cover	1	20
6	09 20 80 024-99	handle	1	20
7	90 31 11 030 00 90	pin	1	2
8	90 31 20 087 00-99	plug	1	20
9	09 31 11 008 90	pin	1	2
10	90 31 20 129 00 90	plug	1	2
11	04 23 10 044 07 90	fixing set	1	2
12	04 30 04 100 00 90	hose	2	2

We reserve the right to change designs, product range and technical specifications without prior notice.
More information can be found at: www.dornbracht.com +49 (0) 2371 8899 900 mail@dornbracht.com