CYO Single-lever bath mixer with stand pipe for free-standing assembly with hand shower set - Dark Chrome

25 863 811

- 247mm projection
- rectangular, air-enriched flow
- max. spout flow rate 26.5 l/min
- Hand shower: COMPACT RAIN, max. flow rate 6.8 l/min (at 3 bar)
- bar-type hand shower with anti-scale system
- wall bracket
- automatic bath/shower diverter
- total height 980 - 1050 mm
- stand pipe height 598 - 668 mm
- height up to aerator 903 – 973 mm
- push-on rosette 131 x 131 mm
- metal shower hose 1250mm with integrated anti-twist protection
- WRAS

Dark Chrome	25 863 811-19
Chrome	25 863 811-00
Brushed Platinum	25 863 811-06
Brushed Durabrass (23kt Gold)	25 863 811-28
Brushed Dark Platinum	25 863 811-99

Required miscellaneous

Concealed floor mounting - 35 945 970 90

CYO Single-lever bath mixer with stand pipe for free-standing assembly with hand shower set - Dark Chrome

25 863 811

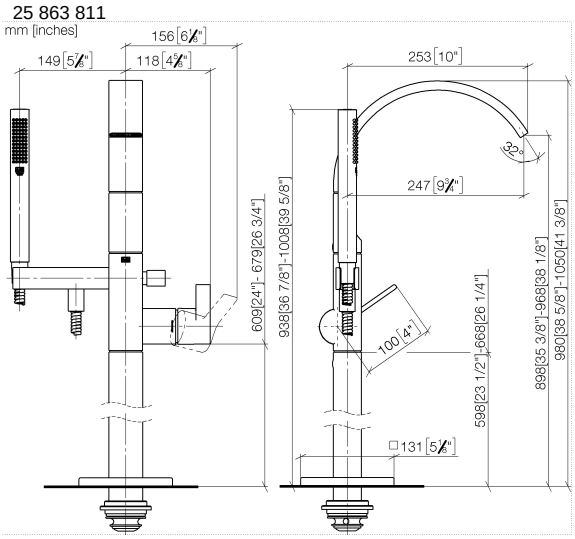

Flow rate chart

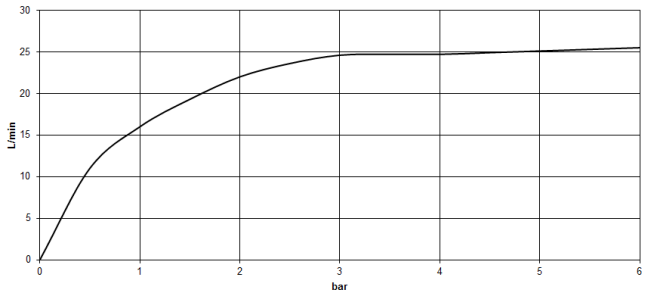

Codes & Standards

ASME A112.18.1 cUPC

25 863 811

Certificates and sustainability

IAPMO_4976

CYO Single-lever bath mixer with stand pipe for free-standing assembly with hand shower set - Dark Chrome

25 863 811

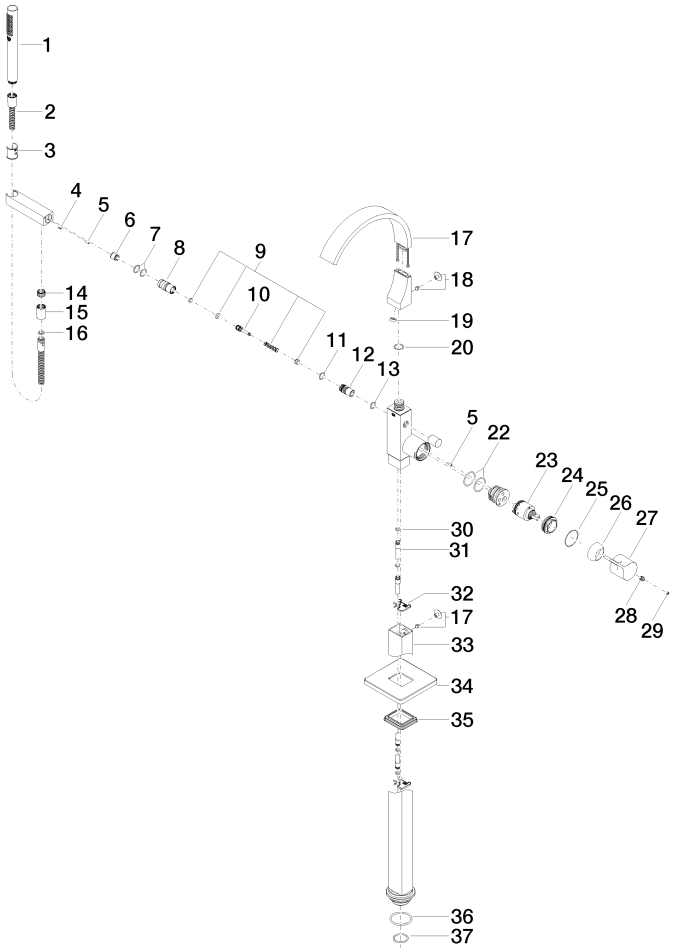

CYO Single-lever bath mixer with stand pipe for free-standing assembly with hand shower set - Dark Chrome

25 863 811

Spare parts list

No.	Item Number	Name	Quantity used	Delivery time
19	09 23 01 057 90	flow reducer	1.00	2
10	09 31 09 094 20-19	pull-rod	1.00	60
7	90 14 10 010 00 90	seal	2.00	2
18	04 31 20 034 00 90	plug	2.00	2
15	90 21 02 069 00-19	cover	1.00	20
6	90 23 01 141 00 90	back-flow preventer	1.00	2
16	90 14 20 026 00 90	seal	1.00	2
5	09 31 11 040 90	pin	3.00	2
14	09 24 03 069 90	nipple	1.00	2
2	90 30 02 072 00-19	Metal shower hose 1/2" x 3/8" x 1250 mm - Dark Chrome	1.00	20
9	90 16 02 023 00 90	spring	1.00	2
3	09 18 40 118 90	sleeve	1.00	2
11	90 14 10 055 00 90	seal	1.00	2
17	90 11 70 011 00-19	spout	1.00	20
4	09 31 11 058 90	pin	1.00	2
12	09 21 34 080-19	nipple	1.00	60
20	09 14 10 031 90	seal	2.00	2
13	90 14 10 033 00 90	seal	1.00	2
1	90 12 11 140 41-19	shower	1.00	20
31	04 28 22 025 00 90	connection	2.00	2
28	90 31 11 030 00 90	pin	1.00	2
37	09 14 10 018 90	seal	1.00	2
35	09 14 03 107 90	seal	1.00	2
34	09 27 71 011-19	rosette	1.00	60
27	09 20 80 022-19	handle	1.00	60
36	09 14 10 084 90	seal	1.00	2
23	90 15 05 039 00 90	cartridge	1.00	2
25	09 14 10 037 90	seal	1.00	2
8	09 24 03 130-19	nipple	1.00	-
	Spare part can no longer be ordered, please order the replacement item			
30	09 14 10 139 90	seal	4.00	2
33	04 28 22 024 00-19	pipe	1.00	60
22	09 14 10 148 90	seal	1.00	2
24	09 24 04 298 90	nut	1.00	2
32	09 20 93 051 90	holder	2.00	2
26	09 28 30 036-19	cover	1.00	20
29	90 31 20 087 00-19	plug	1.00	20

We reserve the right to change designs, product range and technical specifications without prior notice.
More information can be found at: www.dornbracht.com +49 (0) 2371 8899 900 mail@dornbracht.com