WATER POINTS Concealed body spray FlowReduce - Brushed Dark Platinum

SERIES-VARIOUS

36 515 979 Product version from 4/1/2024

- HORIZONTAL RAIN, max. flow rate 6 l/min (at 3 bar)
- Function from: l/min
- with anti-scale system

Technical data:

- cover plate 120 x 120 mm
- 1/2" connection

Notes:

- This product can help a building meet the requirements of Green Building Rating Systems, e.g. LEED®, BREEAM®, DGNB

Flow restrictor (8.3 l/min) to extend shower jet from approx. 500 mm to approx. 1000 mm

Flow restrictor (8.3 l/min) to extend shower jet from approx. 500 mm to approx. 1000 mm

Brushed Dark Platinum	36 515 979-99
Chrome	36 515 979-00
Brushed Platinum	36 515 979-06
Platinum	36 515 979-08
Dark Chrome	36 515 979-19
Light Gold	36 515 979-26
Brushed Light Gold	36 515 979-27
Brushed Durabrass (23kt Gold)	36 515 979-28
Matte Black	36 515 979-33
Brushed Dark Brass	36 515 979-39
Brushed Bronze	36 515 979-42
Brushed Champagne (22kt Gold)	36 515 979-46
Champagne (22kt Gold)	36 515 979-47
Brushed Chrome	36 515 979-93

Required miscellaneous

Concealed wall installation box - 35 205 970 90
- max. recess depth 110 mm
- min. recess depth 85 mm

Required miscellaneous

WATER POINTS Adapter plate - 12 305 970 90
- adapter plate for mounting concealed rough parts 35 205 970 90 on the xGRID installation track.

WATER POINTS Concealed body spray FlowReduce - Brushed Dark Platinum

SERIES-VARIOUS

36 515 979 Product version from 4/1/2024

mm [inches]

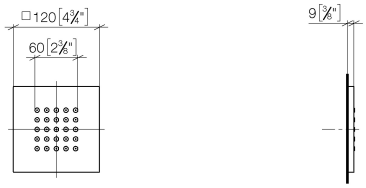

Flow rate chart

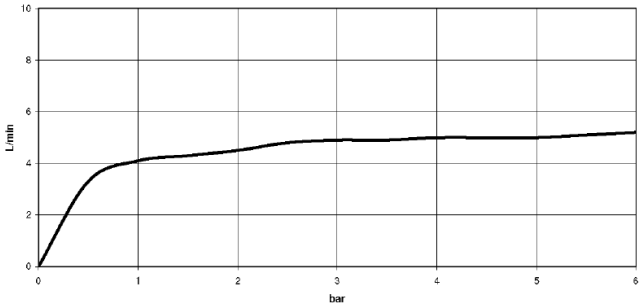

Trajectory diagram

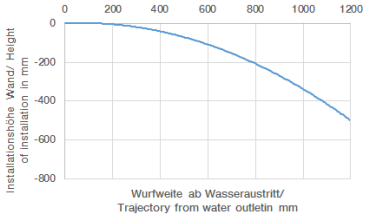

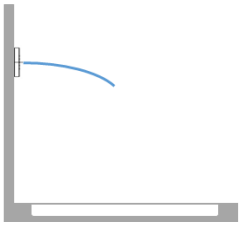

Codes & Standards

ASME A112.18.1	cUPC	DIN 4109	ISO 3822
Scottish Water Byelaws	UK Water Supply Regulations	Ü-Zeichen	

Certificates and sustainability

LGA_18 WRAS_1304 IAPMO_4976 (

WATER POINTS Concealed body spray FlowReduce - Brushed Dark Platinum

SERIES-VARIOUS

36 515 979 Product version from 4/1/2024

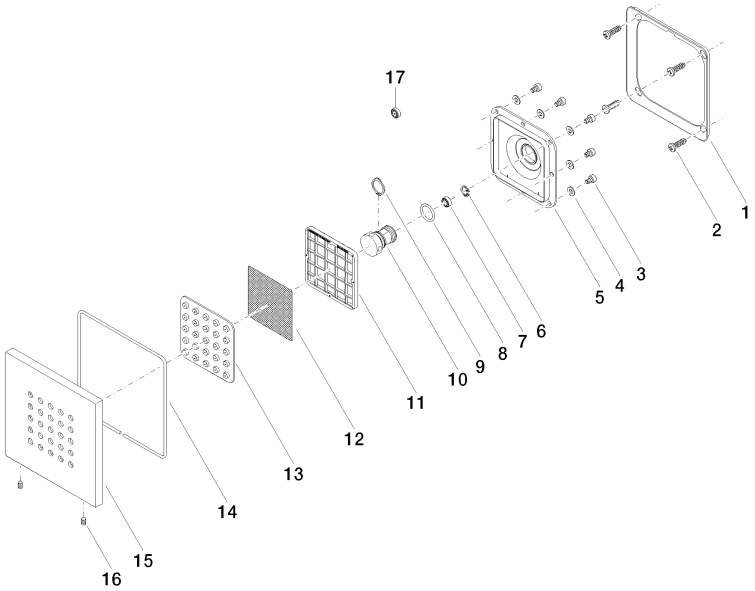

Spare parts list

No.	Item Number	Name	Quantity used	Delivery time
1	09 28 01 024 90	holder	1.00	2
17	09 23 01 052 90	flow reducer	1.00	2
10	09 17 11 146 90	distributor	1.00	60
7	90 23 01 032 00 90	flow reducer	1.00	2
15	09 27 98 004-99	rosette	1.00	20
12	09 29 30 043 90	insert	1.00	2
6	09 16 01 016 90	ring	1.00	2
11	09 17 97 057 90	holder	1.00	2
14	09 14 03 117 90	seal	1.00	2
8	09 14 10 130 90	seal	1.00	2
5	09 12 12 205 90	base	1.00	2
3	09 30 30 031 90	screw	8.00	2
2	09 30 31 022 90	screw	4.00	2
16	09 31 11 048 90	pin	1.00	2
13	09 12 01 075 90	insert	1.00	2
4	09 30 11 024 90	disc	8.00	2
9	09 16 01 017 90	ring	1.00	2

We reserve the right to change designs, product range and technical specifications without prior notice.
More information can be found at: www.dornbracht.com +49 (0) 2371 8899 900 mail@dornbracht.com