Tissue holder with cover - Chrome

LISSÉ

83 510 979

- width 150mm
- height 95 mm
- rosette Ø 40 mm
- 40mm projection

Fits: LISSÉ, META

Chrome	83 510 979-00
Brushed Platinum	83 510 979-06
Dark Chrome	83 510 979-19
Light Gold	83 510 979-26
Brushed Light Gold	83 510 979-27
Matte Black	83 510 979-33
Brushed Bronze	83 510 979-42
Brushed Champagne (22kt Gold)	83 510 979-46
Champagne (22kt Gold)	83 510 979-47
Brushed Chrome	83 510 979-93
Brushed Dark Platinum	83 510 979-99

We reserve the right to change designs, product range and technical specifications without prior notice.
More information can be found at: www.dornbracht.com +49 (0) 2371 8899 900 mail@dornbracht.com

Tissue holder with cover - Chrome

LISSÉ

83 510 979

mm [inches]

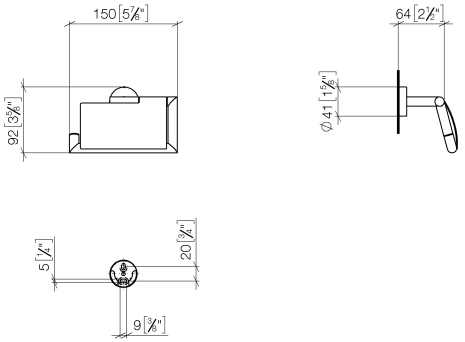

Tissue holder with cover - Chrome

LISSÉ

83 510 979

Product version from 7/1/2023

Parts for other finishes can be found here: Brushed Platinum

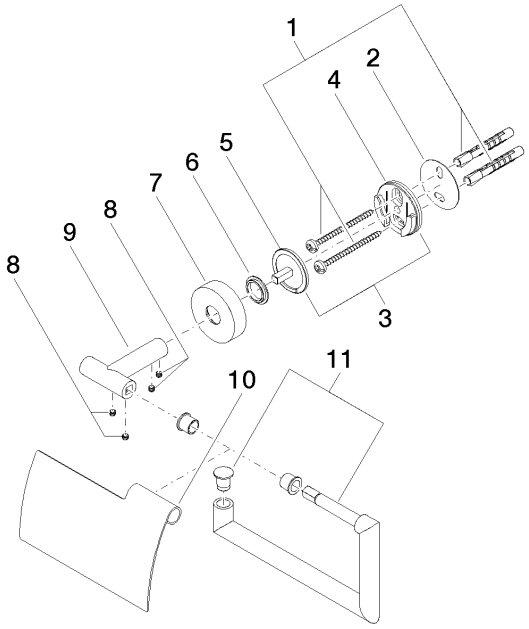

83 510 979

Spare parts list

Product version from 7/1/2023

No.	Item Number	Name	Quantity used	Delivery time
	05 30 31 025 00 90	fixing set	14	2

We reserve the right to change designs, product range and technical specifications without prior notice.
More information can be found at: www.dornbracht.com +49 (0) 2371 8899 900 mail@dornbracht.com