CL.1 Tub spout without diverter for deck-mounted installation - Brushed Dark Platinum

13 612 705 Product version from 3/9/2015 to 5/27/2021

- 7-7/8" Projection
- Rectangular aerator with 55 individual streams
- Total height 4-7/8"
- Height to aerator/spout outlet 4-1/4"
- 1-3/8" hole diameter
- 1/2" connection
- Water flow rate limited to max. 6.5 gpm

Brushed Dark Platinum	13 612 705-99
Chrome	13 612 705-00
Brushed Platinum	13 612 705-06
Dark Chrome	13 612 705-19
Brushed Champagne (22kt Gold)	13 612 705-46
Champagne (22kt Gold)	13 612 705-47

Required article

	Hose set -	12 509 970-90 0010

CL.1 Tub spout without diverter for deck-mounted installation - Brushed Dark Platinum

13 612 705 Product version from 3/9/2015 to 5/27/2021
mm [inches]

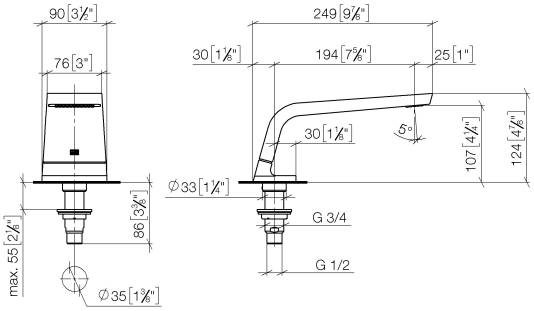

Flow rate chart

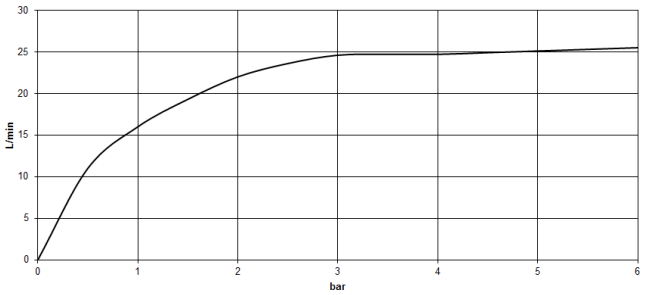

Codes & Standards

ASME A112.18.1	cUPC	DIN 4109	ISO 3822
Scottish Water Byelaws	UK Water Supply Regulations	Ü-Zeichen	

CL.1 Tub spout without diverter for deck-mounted installation - Brushed Dark Platinum

13 612 705 Product version from 3/9/2015 to 5/27/2021

Certificates and sustainability

WRAS_1512 LGA_28 IAPMO_4976

CL.1 Tub spout without diverter for deck-mounted installation - Brushed Dark Platinum

13 612 705 Product version from 3/9/2015 to 5/27/2021

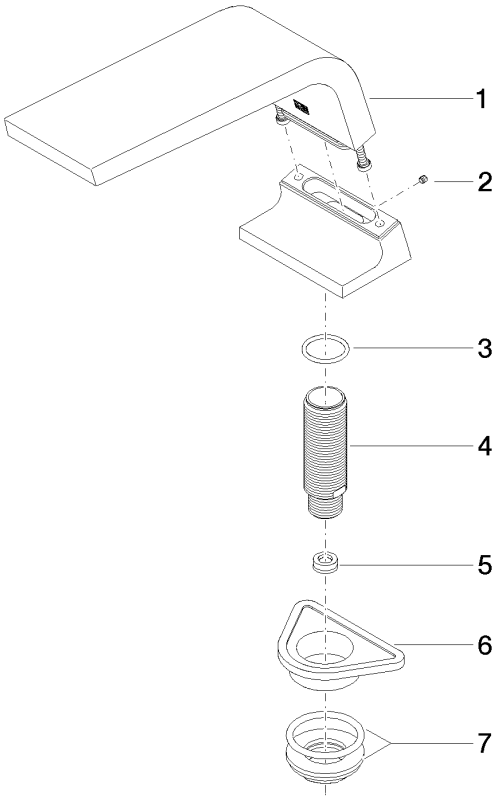

Spare parts list

Number	Item Number	Designation	Number of units	Lead time
6	09 18 40 090 90	sleeve	1.00	2
5	09 23 01 057 90	flow reducer	1.00	2
2	09 31 11 099 90	pin	1.00	2
1	90 11 70 007 00-99	spout	1.00	-
	Spare part can no longer be ordered, please order the replacement item			
7	04 23 10 004 03 90	fixing set	1.00	2
3	09 14 10 009 90	seal	1.00	2
4	09 30 01 117 90	connection	1.00	2