Deck valve counter-clockwise closing cold - Brushed Platinum

SERIES SPECIFIC

20 000 716 Product version from 6/1/2015

- 1-1/4" hole diameter
- Flange 2-3/8" x 2-3/8"
- with marking for cold

Brushed Platinum	20 000 716-06
Chrome	20 000 716-00
Dark Chrome	20 000 716-19
Brushed Champagne (22kt Gold)	20 000 716-46
Champagne (22kt Gold)	20 000 716-47
Brushed Dark Platinum	20 000 716-99

Deck valve counter-clockwise closing cold - Brushed Platinum

SERIES SPECIFIC

20 000 716 Product version from 6/1/2015

mm [inches]

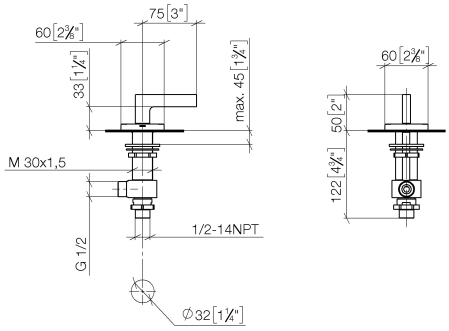

Flow rate chart

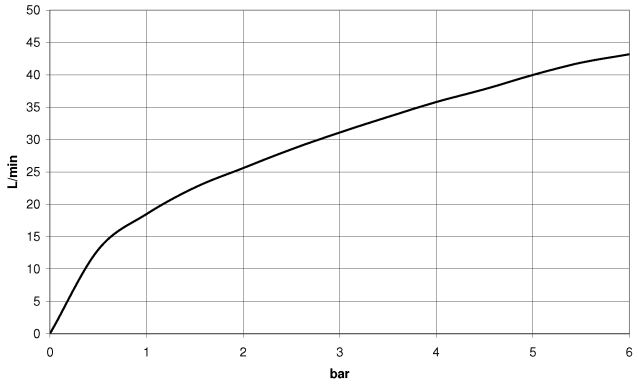

Codes & Standards

ADA	ASME A112.18.1	cUPC	DIN 4109
ISO 3822	Ü-Zeichen		

Certificates and sustainability

IAPMO_4976 LGA_28

Deck valve counter-clockwise closing cold - Brushed Platinum

SERIES SPECIFIC

20 000 716 Product version from 6/1/2015

Parts for other finishes can be found here: Chrome

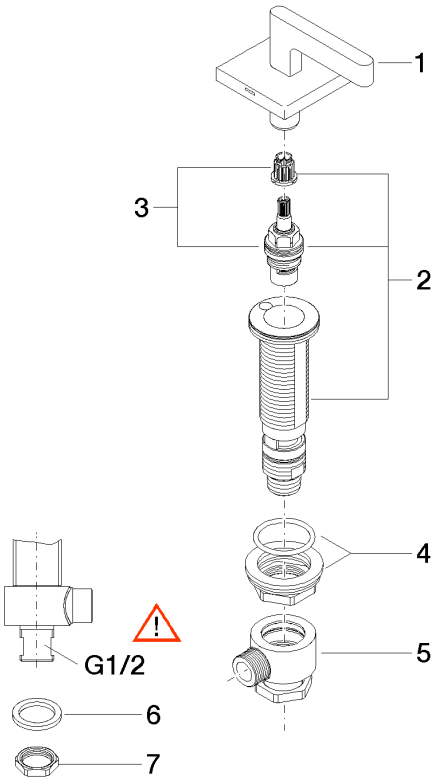

Spare parts list

Number	Item Number	Designation	Number of units	Lead time
4	04 23 10 032 78 90	fixing set	1.00	2
5	04 17 11 023 10 90	distributor	1.00	2
1	90 20 70 057 01-06	handle (cold)	1.00	10
3	90 90 03 132 00 90	top	1.00	2
7	09 23 10 012 90	nut	1.00	2
6	09 30 11 059 90	disc	1.00	2
2	04 17 11 058 32 90	side panel	1.00	2