MADISON Bath shower set for bath rim or tile edge installation - Durabrass (23kt Gold)

MADISON

27 502 360 Product version from 7/31/2009

- spout: circular, air-enriched flow
- max. spout flow rate 23 l/min
- Hand shower: COMPACT RAIN, max. flow rate 6.8 l/min (at 3 bar)
- complete hand shower set with anti-scale system
- 225mm projection
- automatic bath/shower diverter
- height of mixer 185 mm
- height up to aerator 140 mm
- hole diameter valve 32 mm
- hole diameter spout 32 mm
- hole diameter for complete hand shower set 32 mm
- rosette for complete hand shower set Ø 55mm
- rosette for deck valve Ø 55mm
- metal shower hose 1750mm with integrated anti-twist protection

Intrinsic protection against back flow.

Durabrass (23kt Gold)	27 502 360-09
Chrome	27 502 360-00
Brushed Platinum	27 502 360-06
Platinum	27 502 360-08
Brushed Durabrass (23kt Gold)	27 502 360-28
Brushed Dark Brass	27 502 360-39
Brushed Dark Platinum	27 502 360-99

Recommended miscellaneous

Perfecto installation kit - 12 614 970 90

Recommended miscellaneous

Decorative caps for Perfecto - Durabrass (23kt Gold) 12 801 970-09

●1 pair

MADISON Bath shower set for bath rim or tile edge installation - Durabrass (23kt Gold)

27 502 360 Product version from 7/31/2009

mm [inches]

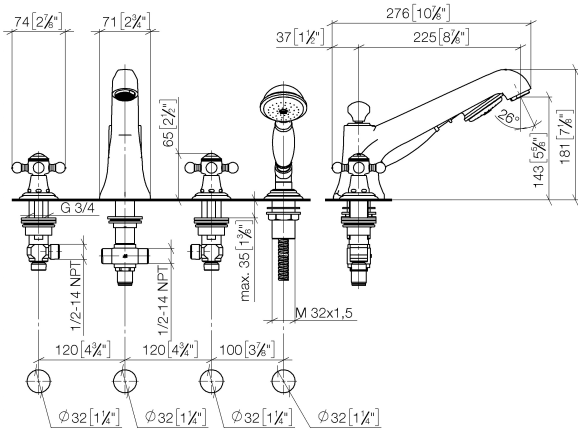

Flow rate chart

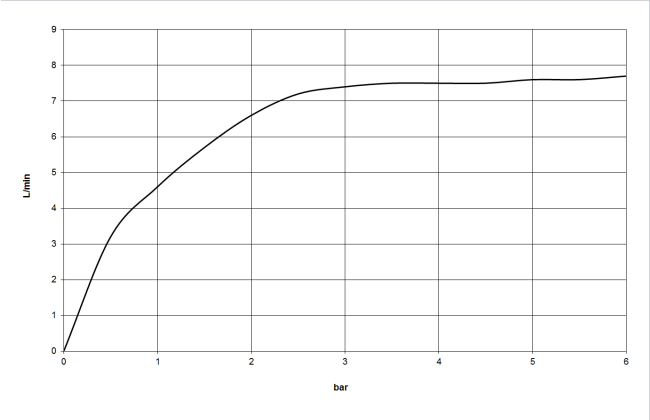

Codes & Standards

DIN 4109	EN 1717	ISO 3822	Ü-Zeichen

MADISON Bath shower set for bath rim or tile edge installation - Durabrass (23kt Gold)

27 502 360 Product version from 7/31/2009

Certificates and sustainability

LGA_8	Belgaqua_21-380-2

MADISON Bath shower set for bath rim or tile edge installation - Durabrass (23kt Gold)

27 502 360 Product version from 7/31/2009

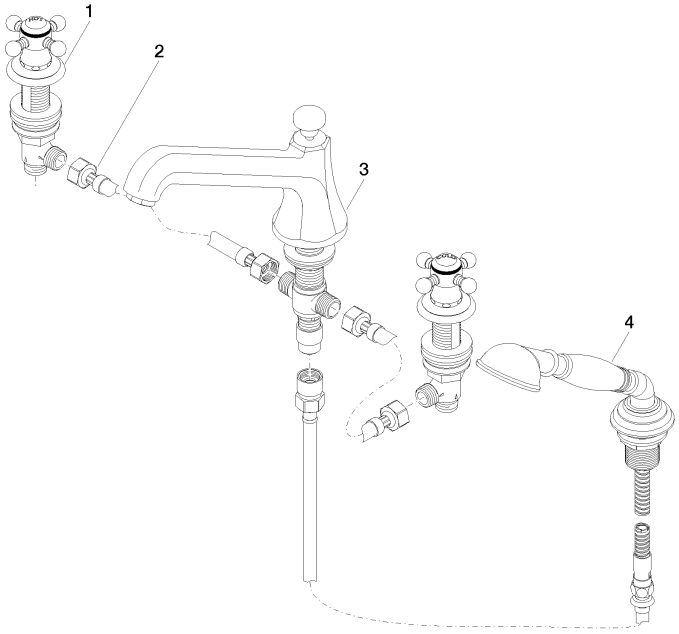

Spare parts list

No.	Item Number	Name	Quantity used	Delivery time
3	13 502 380-09	spout	1.00	60
2	12 502 970 90	High pressure hose 1/2" x 1/2" x 400 mm -	2.00	2
4	27 703 360-09	MADISON Hand shower set for bath rim or tile edge installation - Durabrass (23kt Gold)	1.00	-
	Spare part can no longer be ordered, please order the replacement item			
1	20 000 360-09	MADISON Deck valve clockwise closing cold or hot - Durabrass (23kt Gold)	2.00	-
	Spare part can no longer be ordered, please order the replacement item			