Bidet spray - Dark Chrome

27 701 970

- wall bracket with integrated safety shut off valve
- max. standing pressure: 5bar
- hand shower with back flow preventer
- 1/2" shower outlet
- rosette Ø 60 mm
- metal shower hose 1250mm with integrated anti-twist protection

This product does not provide intrinsic protection against backfl ow in accordance with DIN EN 1717. This product must not be installed and operated in countries where compliance with DIN EN 1717 is stipulated.

The bidet shower must be operated with an upstream main fitting.

Dark Chrome	27 701 970-19
Chrome	27 701 970-00
Brushed Platinum	27 701 970-06
Platinum	27 701 970-08
Durabrass (23kt Gold)	27 701 970-09
Light Gold	27 701 970-26
Brushed Light Gold	27 701 970-27
Brushed Durabrass (23kt Gold)	27 701 970-28
Brushed Bronze	27 701 970-42
Brushed Champagne (22kt Gold)	27 701 970-46
Champagne (22kt Gold)	27 701 970-47
Brushed Chrome	27 701 970-93
Brushed Dark Platinum	27 701 970-99

Recommended miscellaneous

Concealed wall elbow - 35 085 970 90
- max. recess depth mm
- min. recess depth mm

Bidet spray - Dark Chrome

27 701 970

mm [inches]

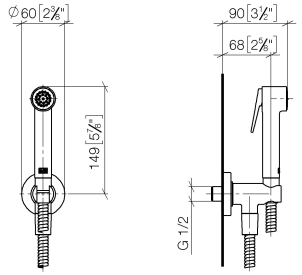

Flow rate chart

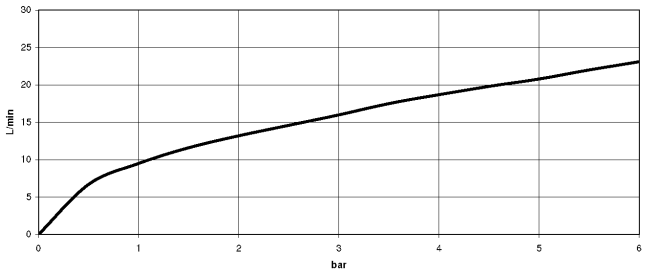

Bidet spray - Dark Chrome
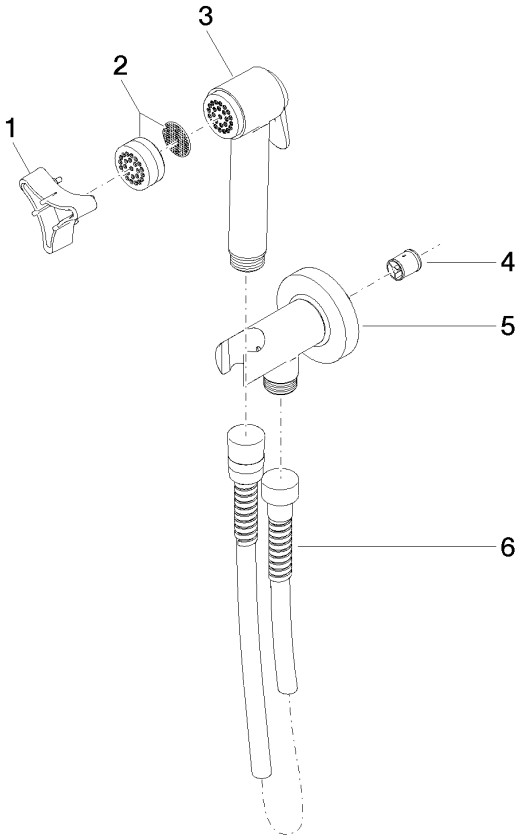
27 701 970